FAST CONNECTOR SOCKETS

MORE PRODUCT INFO

WITH PIN

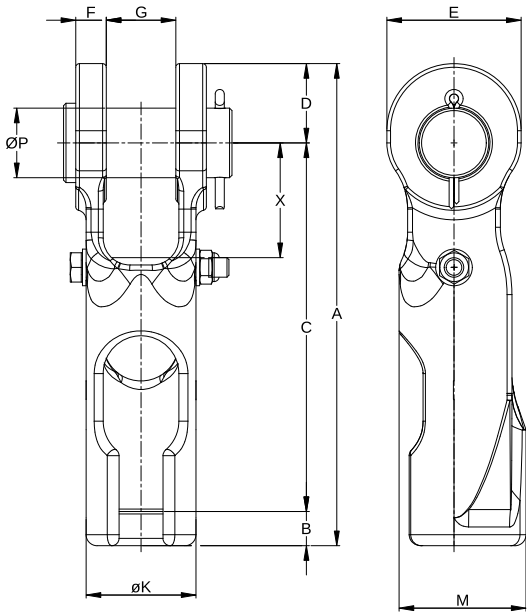

WITH BOLT

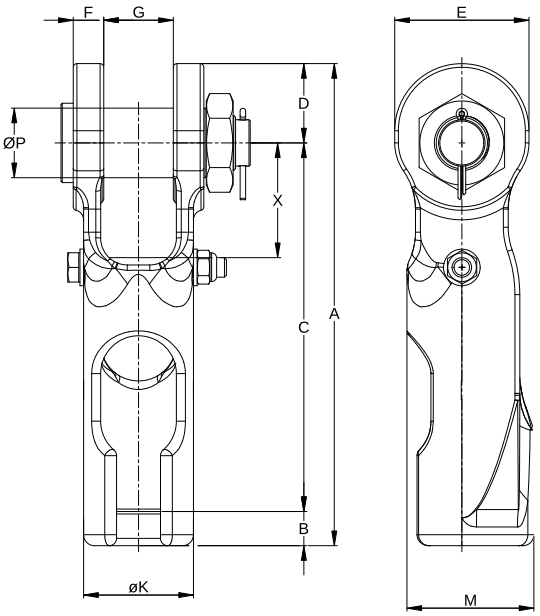

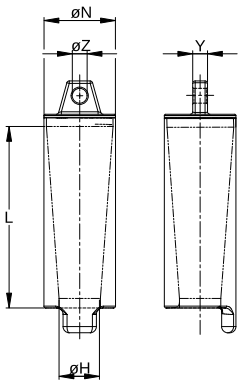

METRIC

MODEL NUMBER	MBL (MTONS)	WIRE ROPE Ø (MM)	APPROX. RESIN VOLUME (CC)	DIMENSIONS (MM)															WEIGHT (KG)
				A	B	C	D	E	F	G	ØH	ØK	L	M	ØN	ØP	X	Y	ØZ	
FCS 701	20	11 - 13	35	190	13	149	28	48	12.5	26	15	40	70	47	26	25	45	8	8	1.7
FCS 702	25	14 - 16	50	227	16	179	32	56	14.5	32	19	50	84	58	32	30	58	8	8	3
FCS 703	40	17 - 19	80	260	18	202	40	68	16.5	38	22	60	98	70	39	35	64	10	10.5	4.6
FCS 704	55	20 - 22	125	303	22	233	48	80	20.5	45	26.5	69	117	80	45	41	82	12	12	7.3
FCS 705	80	23 - 26	160	365	25	282	58	98	22.5	51	29.5	80	138	93	52	51	95	12	12	11.7
FCS 706	100	27 - 29	210	400	28	302	65	110	25	57	33.5	90	157	104	58	57	97	12	12	15.2
FCS 707	120	30 - 32	350	426	30	324	72	124	28	63	36.5	98	170	111	64	63	100	14	12	20
FCS 708	130	34 - 36	425	465	34	356	76	132	28	70	40	102	183	117	68	63	110	16	14	22.6
FCS 709	160	37 - 39	500	502	37	385	80	140	30	76	43	110	207	125	76	70	115	17	17.5	30.8
FCS 710	200	40 - 42	700	550	40	425	85	148	33	76	48	126	230	142	85	76	125	20	20	50
FCS 711	250	43 - 48	1250	620	45	477	98	170	39	89	56	140	260	157	95	89	135	20	20	65
FCS 712	300	49 - 52	1425	685	48	527	108	186	46	101	60	157	285	175	104	95	150	25	23	79.7
FCS 713	375	54 - 58	2000	760	55	593	120	210	53	113	66	170	330	185	118	108	165	25	23	108.3

MBL = Minimum Breaking Load | **Mtons =** Metric tonnes | Assembly weights may vary depending on the selected configuration

FINISH Hot-dip galvanised with zinc-nickel plated components | Primer RAL 170 60 45 (for FCS 704 - FCS 713)

GLOBAL ROPE FITTINGS
AQUALLINE PRODUCTS