FAST CONNECTOR SOCKETS

MORE PRODUCT INFO

WITH PIN

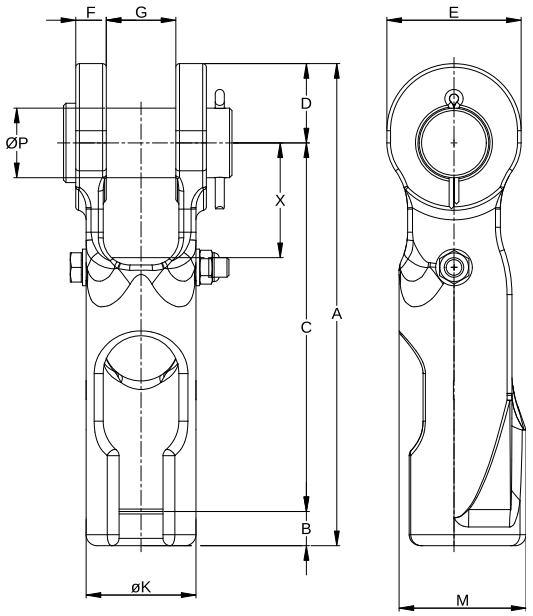

WITH BOLT

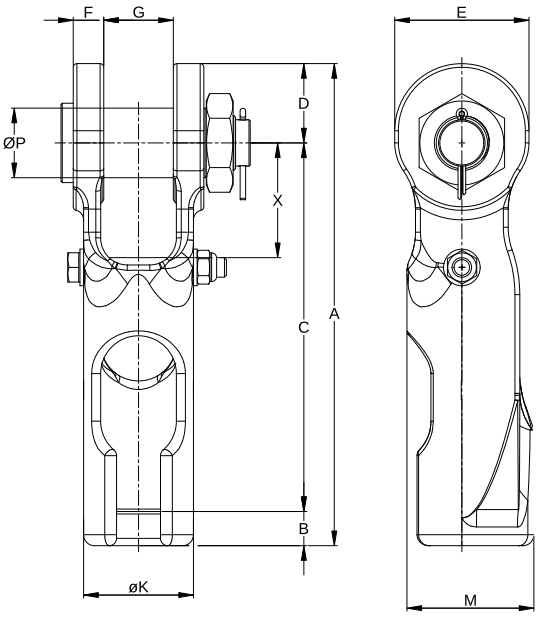

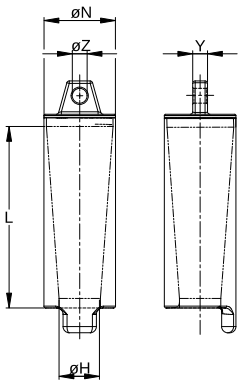

IMPERIAL

MODEL NUMBER	MBL (MTONS)	WIRE ROPE Ø (INCH)	APPROX. RESIN VOLUME (CC)	DIMENSIONS (INCH)															WEIGHT (LBS)
				A	B	C	D	E	F	G	ØH	ØK	L	M	ØN	ØP	X	Y	ØZ	
FCS 701	20	7/16 - 1/2	35	7.48	0.51	5.87	1.10	1.89	0.49	1.02	0.59	1.57	2.76	1.85	1.02	0.98	1.77	0.31	0.31	3.7
FCS 702	25	9/16 - 5/8	50	8.94	0.63	7.05	1.26	2.20	0.57	1.26	0.75	1.97	3.31	2.28	1.26	1.18	2.28	0.31	0.31	6.6
FCS 703	40	2/3 - 3/4	80	10.24	0.71	7.95	1.57	2.68	0.65	1.50	0.87	2.36	3.86	2.76	1.54	1.38	2.52	0.39	0.41	10.1
FCS 704	55	7/8	125	11.93	0.87	9.17	1.89	3.15	0.81	1.77	1.04	2.72	4.61	3.15	1.77	1.61	3.23	0.47	0.47	16.1
FCS 705	80	1	160	14.37	0.98	11.10	2.28	3.86	0.89	2.01	1.16	3.15	5.43	3.66	2.05	2.01	3.74	0.47	0.47	25.8
FCS 706	100	1 1/8	210	15.75	1.10	11.89	2.56	4.33	0.98	2.24	1.32	3.54	6.18	4.09	2.28	2.24	3.82	0.47	0.47	33.5
FCS 707	120	1 1/4	350	16.77	1.18	12.76	2.83	4.88	1.10	2.48	1.44	3.86	6.69	4.37	2.52	2.48	3.94	0.55	0.47	44.1
FCS 708	130	1 3/8	425	18.31	1.34	14.02	2.99	5.20	1.10	2.76	1.57	4.02	7.20	4.61	2.68	2.48	4.33	0.63	0.55	49.8
FCS 709	160	1 1/2	500	19.76	1.46	15.16	3.15	5.51	1.18	2.99	1.69	4.33	8.15	4.92	2.99	2.76	4.53	0.67	0.69	67.9
FCS 710	200	1 5/8	700	21.65	1.57	16.73	3.35	5.83	1.30	2.99	1.89	4.96	9.06	5.59	3.35	2.99	4.92	0.79	0.79	110.2
FCS 711	250	1 3/4 - 1 7/8	1250	24.41	1.77	18.78	3.86	6.69	1.54	3.50	2.20	5.51	10.24	6.18	3.74	3.50	5.31	0.79	0.79	143.3
FCS 712	300	2	1425	26.97	1.89	20.75	4.25	7.32	1.81	3.98	2.36	6.18	11.22	6.89	4.09	3.74	5.91	0.98	0.91	175.7
FCS 713	375	2 1/4	2000	29.92	2.17	23.35	4.72	8.27	2.09	4.45	2.60	6.69	12.99	7.28	4.65	4.25	6.50	0.98	0.91	238.8

MBL = Minimum Breaking Load | **Mtons =** Metric tonnes | Assembly weights may vary depending on the selected configuration

FINISH Hot-dip galvanised with zinc-nickel plated components | Primer RAL 170 60 45 (for FCS 704 - FCS 713)

GLOBAL ROPE FITTINGS
AQUALLINE PRODUCTS