OPEN DIN SOCKETS

MORE PRODUCT INFO

WITH BOLT

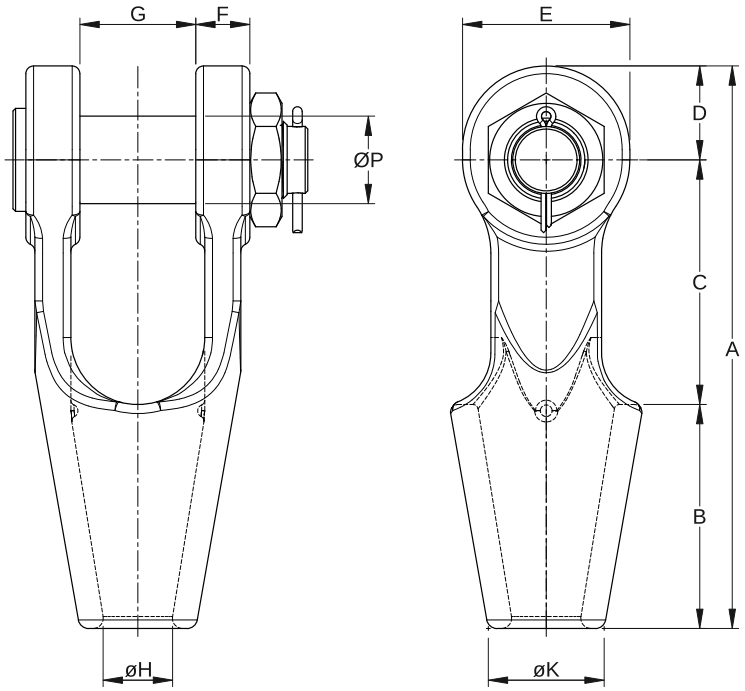

IMPERIAL

MODEL NUMBER	MBL (MTONS)	WIRE ROPE Ø (INCH)	APPROX. RESIN VOLUME (CC)	DIMENSIONS (INCH)										WEIGHT (LBS)
				A	B	C	D	E	F	G	ØH	ØK	ØP	
ODS 1.6	12	1/2 - 7/16	30	5.87	2.36	2.56	0.94	1.73	0.55	1.06	0.67	1.26	0.79	2.6
ODS 2.5	20	7/16 - 9/16	50	6.97	2.72	3.11	1.14	2.05	0.63	1.30	0.79	1.50	0.94	4.6
ODS 3	25	5/8 - 3/4	80	7.80	3.07	3.43	1.30	2.28	0.71	1.50	0.91	1.69	1.06	6
ODS 4	30	9/16 - 7/8	100	8.46	3.31	3.78	1.38	2.44	0.79	1.65	0.98	1.81	1.18	7.7
ODS 5	40	3/4 - 1	125	9.53	3.70	4.17	1.65	2.91	0.91	1.85	1.06	1.97	1.42	11.2
ODS 6	50	7/8 - 1 1/8	150	10.43	4.17	4.49	1.77	3.15	0.98	2.09	1.18	2.13	1.54	14.1
ODS 8	60	1 - 1 3/16	200	11.50	4.53	5.00	1.97	3.54	1.06	2.36	1.30	2.36	1.77	19.6
ODS 10	70	1 1/8 - 1 5/16	270	12.64	4.92	5.51	2.20	3.94	1.14	2.60	1.42	2.56	1.89	26
ODS 12	80	1 1/4 - 1 1/2	400	13.94	5.51	6.14	2.28	4.09	1.30	2.87	1.57	2.76	2.05	32.2
ODS 16	120	1 3/8 - 1 5/8	600	15.71	6.26	6.81	2.64	4.72	1.42	3.19	1.77	3.15	2.36	47.8
ODS 20	160	1 5/8 - 1 3/4	750	17.20	6.85	7.48	2.87	5.12	1.65	3.54	2.01	3.54	2.68	71
ODS 25	200	1 3/4 - 1 7/8	1000	19.21	7.48	8.46	3.27	5.91	2.48	3.94	2.17	3.94	2.83	104.7
ODS 32	250	1 15/16 - 2 1/4	1400	20.67	8.23	9.09	3.74	6.69	2.76	4.33	2.56	4.65	3.15	140
ODS 40	320	2 1/4 - 2 1/2	2000	23.46	9.33	10.35	4.21	7.48	3.11	4.92	2.95	5.20	3.54	176.4
ODS 50	400	2 7/16 - 2 5/8	2700	25.91	10.31	11.34	4.33	7.87	3.31	5.51	3.15	5.91	3.94	249.1

MBL = Minimum Breaking Load | **Mtons =** Metric tonnes

FINISH Hot-dip galvanised with zinc-nickel plated components | Primer RAL 170 60 45 (for ODS 10 - ODS 50)