OPEN JIS SOCKETS

MORE PRODUCT INFO

WITH BOLT

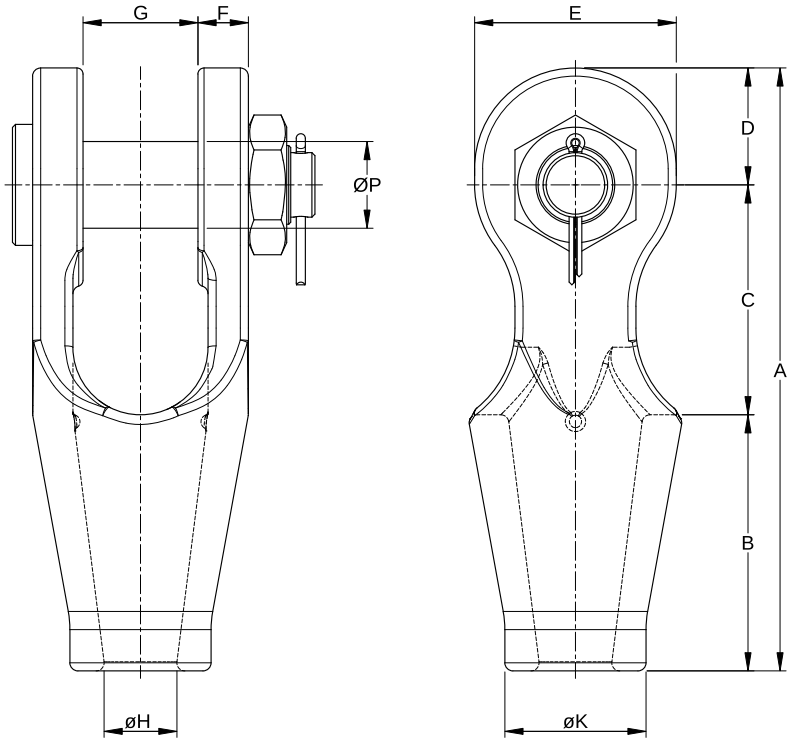

IMPERIAL

MODEL NUMBER	MBL (MTONS)	WIRE ROPE Ø (INCH)	APPROX. RESIN VOLUME (CC)	DIMENSIONS (INCH)										WEIGHT (LBS)
				A	B	C	D	E	F	G	ØH	ØK	ØP	
OJS 16	24	5/8	50	7.20	2.99	2.95	1.26	2.20	0.51	1.26	0.79	1.54	0.98	4.2
OJS 18	30	11/16	80	8.15	3.50	3.15	1.50	2.52	0.59	1.50	0.91	1.77	1.10	6.2
OJS 20	36	3/4	125	8.66	3.74	3.35	1.57	2.76	0.65	1.65	0.98	1.89	1.22	7.9
OJS 22	40	7/8	160	9.25	3.98	3.50	1.77	3.15	0.81	1.77	1.18	2.28	1.34	11.5
OJS 24	48	15/16	175	10.39	4.49	3.98	1.93	3.39	0.89	2.01	1.26	2.44	1.46	14.8
OJS 25	60	1	200	10.87	4.72	4.13	2.01	3.54	0.89	2.01	1.34	2.56	1.57	16.3
OJS 28	72	1 1/8	230	11.77	5.00	4.49	2.28	3.94	0.98	2.24	1.42	2.76	1.69	22.3
OJS 30	80	1 3/16	300	12.32	5.31	4.65	2.36	4.09	0.98	2.24	1.50	2.95	1.81	24.3
OJS 32	90	1 1/4	350	13.03	5.47	5.00	2.56	4.33	1.10	2.48	1.61	3.27	1.93	31.3
OJS 34	100	1 5/16	400	13.66	5.91	5.12	2.64	4.49	1.10	2.48	1.69	3.27	2.05	33.1
OJS 36	110	1 3/8	450	14.57	6.30	5.43	2.83	4.88	1.18	2.76	1.77	3.54	2.17	41.4
OJS 38	120	1 1/2	500	15.31	6.69	5.71	2.91	5.04	1.18	2.83	1.85	3.54	2.28	44.3
OJS 40	135	1 9/16	600	15.98	6.89	6.10	2.99	5.12	1.31	2.99	1.97	3.82	2.40	55.1
OJS 42	150	1 5/8	700	16.93	7.52	6.30	3.11	5.35	1.54	3.15	2.09	3.94	2.56	68.3

MBL = Minimum Breaking Load | **Mtons =** Metric tonnes

FINISH Hot-dip galvanised with zinc-nickel plated components