OPEN STRAND SPELTER SOCKETS

MORE PRODUCT INFO

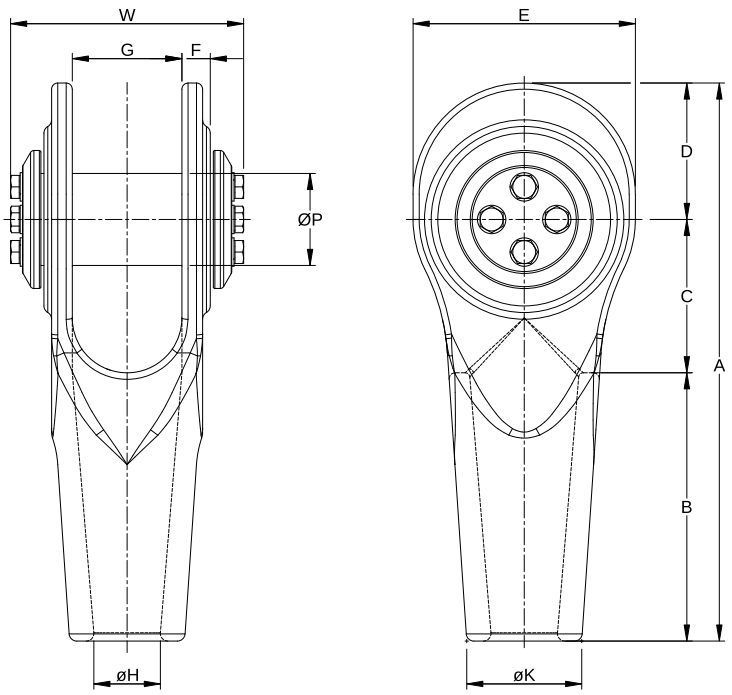

METRIC

MODEL NUMBER	MBL (MTONS)	STRUCTURAL STRAND Ø (MM)	APPROX. RESIN VOLUME (CC)	DIMENSIONS (MM)											WEIGHT (KG)
				A	B	C	D	E	F	G	ØH	ØK	ØP	W	
OSSS 420	50	20	100	225	100	70	55	90	12.5	46	27	48	40	120	3.5
OSSS 425	70	25	160	275	125	80	66	110	14.5	57	32	57	45	135	6
OSSS 430	100	30	220	318	150	90	78	130	17.5	68	37	66	55	160	10
OSSS 435	125	35	400	355	175	95	85	140	19.5	74	44	78	60	175	15
OSSS 440	175	40	800	395	200	105	95	160	22	84	49	86	65	185	18
OSSS 445	225	45	1200	446	225	115	106	176	24	92	57	98	75	210	27
OSSS 450	280	50	1600	503	250	130	123	200	26	104	62	108	85	230	35
OSSS 455	360	55	2000	560	275	150	135	220	28	112	67	116	90	250	52
OSSS 460	450	60	2500	613	300	165	148	240	30	124	74	130	100	265	70
OSSS 465	500	65	3000	675	325	185	165	270	33	132	80	140	110	280	86
OSSS 470	560	70	4000	728	350	200	178	290	37	143	87	150	120	300	110
OSSS 475	600	75	5000	785	375	220	190	310	39	158	92	162	130	340	160
OSSS 480	700	80	6000	838	400	235	203	330	45	168	98	173	140	360	190
OSSS 485	800	85	7000	895	420	260	215	350	51	178	104	188	145	400	230
OSSS 490	900	90	8000	950	440	275	235	380	57	190	111	208	154	425	275
OSSS 495	1000	95	9000	1040	450	330	260	410	62	198	120	255	164	450	350

MBL = Minimum Breaking Load | **Mtons =** Metric tonnes

FINISH Hot-dip galvanised with zinc-nickel plated components | Primer RAL 170 60 45

GLOBAL ROPE FITTINGS
AQUALLINE PRODUCTS