OPEN STRAND SPELTER SOCKETS

MORE PRODUCT INFO

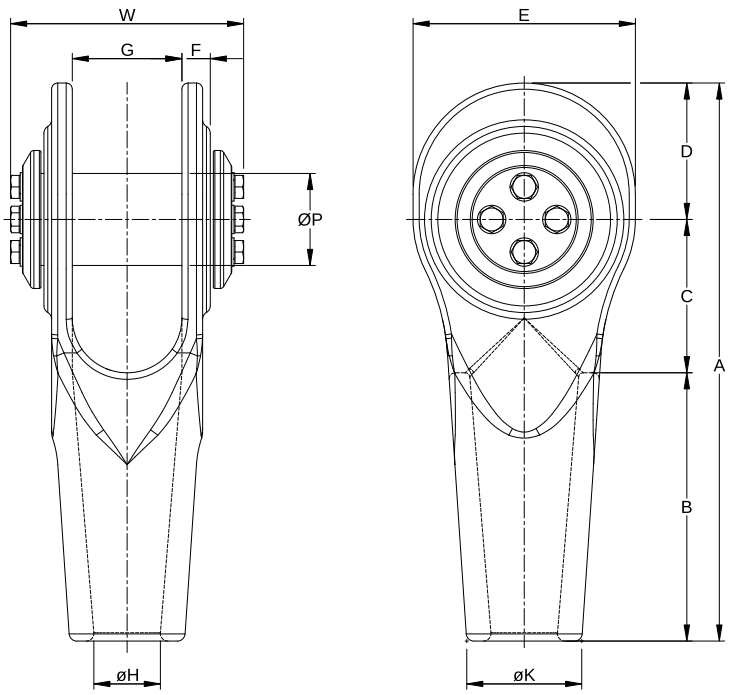

IMPERIAL

MODEL NUMBER	MBL (MTONS)	STRUCTURAL STRAND Ø (INCH)	APPROX. RESIN VOLUME (CC)	DIMENSIONS (INCH)											WEIGHT (LBS)
				A	B	C	D	E	F	G	ØH	ØK	ØP	W	
OSSS 420	50	3/4	100	8.86	3.94	2.76	2.17	3.54	0.49	1.81	1.06	1.89	1.57	4.72	7.7
OSSS 425	70	1	160	10.83	4.92	3.15	2.60	4.33	0.57	2.24	1.26	2.24	1.77	5.31	13.2
OSSS 430	100	1 1/8	220	12.52	5.91	3.54	3.07	5.12	0.69	2.68	1.46	2.60	2.17	6.30	22
OSSS 435	125	1 3/8	400	13.98	6.89	3.74	3.35	5.51	0.77	2.91	1.73	3.07	2.36	6.89	33.1
OSSS 440	175	1 5/8	800	15.55	7.87	4.13	3.74	6.30	0.87	3.31	1.93	3.39	2.56	7.28	39.7
OSSS 445	225	1 3/4	1200	17.56	8.86	4.53	4.17	6.93	0.94	3.62	2.24	3.86	2.95	8.27	59.5
OSSS 450	280	2	1600	19.80	9.84	5.12	4.84	7.87	1.02	4.09	2.44	4.25	3.35	9.06	77.2
OSSS 455	360	2 1/8	2000	22.05	10.83	5.91	5.31	8.66	1.10	4.41	2.64	4.57	3.54	9.84	114.6
OSSS 460	450	2 3/8	2500	24.13	11.81	6.50	5.83	9.45	1.18	4.88	2.91	5.12	3.94	10.43	154.3
OSSS 465	500	2 1/2	3000	26.57	12.80	7.28	6.50	10.63	1.30	5.20	3.15	5.51	4.33	11.02	189.6
OSSS 470	560	2 3/4	4000	28.66	13.78	7.87	7.01	11.42	1.46	5.63	3.43	5.91	4.72	11.81	242.5
OSSS 475	600	3	5000	30.91	14.76	8.66	7.48	12.20	1.54	6.22	3.62	6.38	5.12	13.39	352.7
OSSS 480	700	3 1/4	6000	32.99	15.75	9.25	7.99	12.99	1.77	6.61	3.86	6.81	5.51	14.17	418.9
OSSS 485	800	3 1/3	7000	35.24	16.54	10.24	8.46	13.78	2.01	7.01	4.09	7.40	5.71	15.75	507.1
OSSS 490	900	3 1/2	8000	37.40	17.32	10.83	9.25	14.96	2.24	7.48	4.37	8.19	6.06	16.73	606.3
OSSS 495	1000	3 3/4	9000	40.94	17.72	12.99	10.24	16.14	2.44	7.80	4.72	10.04	6.46	17.72	771.6

MBL = Minimum Breaking Load | **Mtons =** Metric tonnes

FINISH Hot-dip galvanised with zinc-nickel plated components | Primer RAL 170 60 45

GLOBAL ROPE FITTINGS
AQUALLINE PRODUCTS