OPEN WEDGE SOCKETS

MORE PRODUCT INFO

WITH PIN

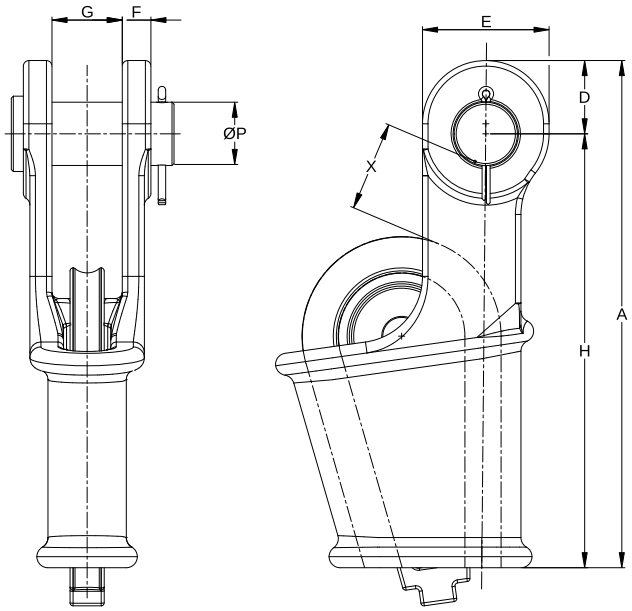

WITH BOLT

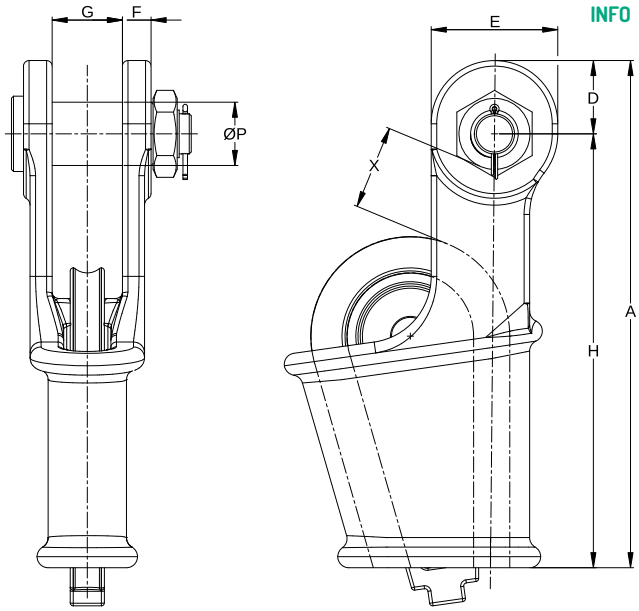

METRIC

MODEL NUMBER	MBL (MTONS)	WIRE ROPE Ø (MM)	DIMENSIONS (MM)								WEIGHT (KG)
			A	D	E	F	G	H	ØP	X	
OWS 0.15	5	5 - 6	101	17	30	8	17	84	16	35	0.4
OWS 0.25	8	7 - 8	130	20	34	9	18	110	17.5	40	0.8
OWS 0.5	12	9 - 10	150	23	40	11	20.5	125	20.6	45	1.4
OWS 1	20	11 - 13	183	27	48	12.7	25.6	156	25.4	60	2.4
OWS 2	25	14 - 16	224	32	56	14.5	32	192	30	65	3.8
OWS 3	40	17 - 19	272	40	68	16.5	38	232	35	70	6.4
OWS 4	55	20 - 22	312	48	80	20.5	45	264	41	80	9.8
OWS 5	80	23 - 26	370	58	100	22.5	51	312	51	90	14.8
OWS 6	100	27 - 29	413	65	110	25	57	348	57	100	21.8
OWS 7	120	30 - 32	455	72	124	28	63	384	63	110	30.5
OWS 8	130	34 - 36	508	76	132	28	70	432	63	125	37.7
OWS 9	160	37 - 39	548	80	140	30	76	468	70	140	49.5
OWS 10	200	40 - 42	589	85	150	33	76	504	76	155	62.5
OWS 11	250	43 - 48	674	98	170	39	89	576	89	175	94.1
OWS 12	300	49 - 52	733	108	186	46	101	625	95	195	121
OWS 13	375	54 - 58	816	120	210	53	113	696	108	220	168
OWS 14	450	60 - 68	950	133	230	60	127	817	121	250	294
OWS 15	600	72 - 76	1057	145	250	76	146	912	133	280	375.8
OWS 16	650	81 - 86	1160	160	275	79	159	1000	140	330	463.6
OWS 17	750	88 - 90	1272	180	310	85	175	1100	155	375	650
OWS 18	900	92 - 95	1400	200	350	90	191	1200	178	426	918

MBL = Minimum Breaking Load | **Mtons =** Metric tonnes | **X =** Depending on the actual wire rope diameter, rope construction and fill factor
Assembly weights may vary depending on the selected configuration

FINISH Hot-dip galvanised with zinc-nickel plated components | Primer RAL 170 60 45 (for OWS 4 - OWS 18)

GLOBAL ROPE FITTINGS
AQUALLINE PRODUCTS