OPEN WEDGE SOCKETS

MORE PRODUCT INFO

WITH PIN

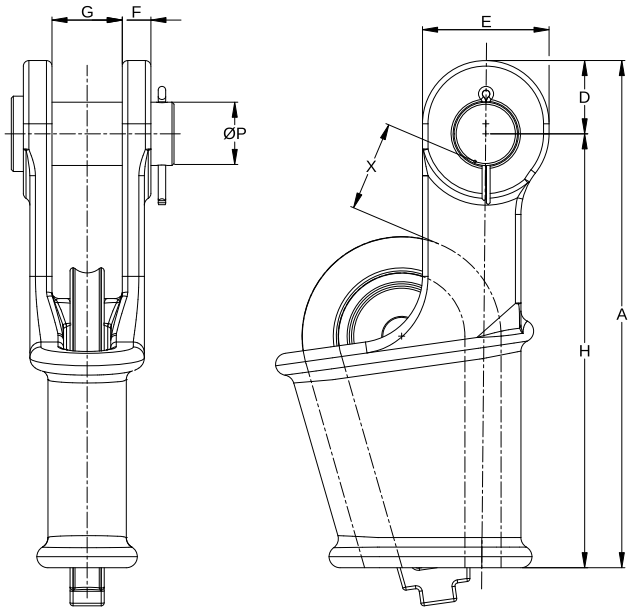

WITH BOLT

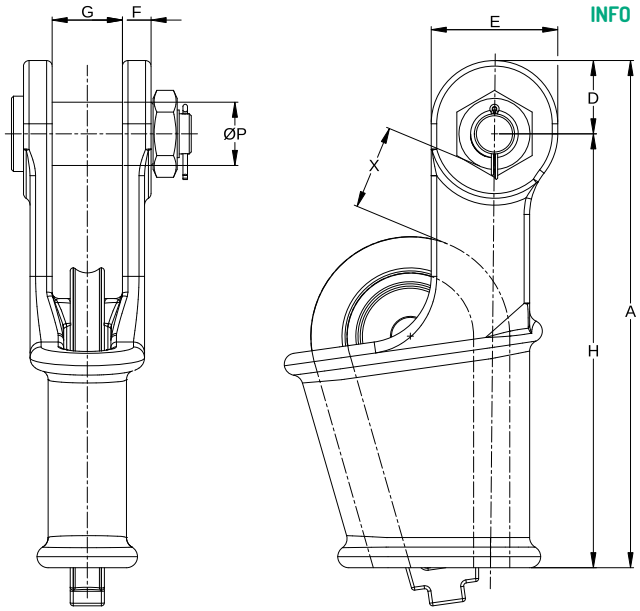

IMPERIAL

MODEL NUMBER	MBL (MTONS)	WIRE ROPE Ø (INCH)	DIMENSIONS (INCH)								WEIGHT (LBS)
			A	D	E	F	G	H	ØP	X	
OWS 0.15	5	3/16 - 1/4	3.98	0.67	1.18	0.31	0.67	3.31	0.63	1.38	0.9
OWS 0.25	8	5/16	5.12	0.79	1.34	0.35	0.71	4.33	0.69	1.57	1.8
OWS 0.5	12	3/8	5.91	0.91	1.57	0.43	0.81	4.92	0.81	1.77	3.1
OWS 1	20	7/16 - 1/2	7.20	1.06	1.89	0.50	1.01	6.14	1.00	2.36	5.3
OWS 2	25	9/16 - 5/8	8.82	1.26	2.20	0.57	1.26	7.56	1.18	2.56	8.4
OWS 3	40	3/4	10.71	1.57	2.68	0.65	1.50	9.13	1.38	2.76	14.1
OWS 4	55	7/8	12.28	1.89	3.15	0.81	1.77	10.39	1.61	3.15	21.6
OWS 5	80	1	14.57	2.28	3.94	0.89	2.01	12.28	2.01	3.54	32.6
OWS 6	100	1 1/8	16.26	2.56	4.33	0.98	2.24	13.70	2.24	3.94	48.1
OWS 7	120	1 1/4	17.91	2.83	4.88	1.10	2.48	15.12	2.48	4.33	67.2
OWS 8	130	1 3/8	20.00	2.99	5.20	1.10	2.76	17.01	2.48	4.92	83.1
OWS 9	160	1 1/2	21.57	3.15	5.51	1.18	2.99	18.43	2.76	5.51	109.1
OWS 10	200	1 5/8	23.19	3.35	5.91	1.42	2.99	19.84	2.99	6.10	137.8
OWS 11	250	1 3/4 - 1 7/8	26.54	3.86	6.69	1.54	3.50	22.68	3.50	6.89	207.5
OWS 12	300	2	28.86	4.25	7.32	1.81	3.98	24.61	3.74	7.68	266.8
OWS 13	375	2 1/4	32.13	4.72	8.27	2.09	4.45	27.40	4.25	8.66	370.4
OWS 14	450	2 1/2	37.40	5.24	9.06	2.36	5.00	32.17	4.76	9.84	648.2
OWS 15	600	3	41.61	5.71	9.84	2.99	5.75	35.91	5.24	11.02	828.5
OWS 16	650	3 1/4 - 3 3/8	45.67	6.30	10.83	3.11	6.26	39.37	5.51	12.99	1022.1
OWS 17	750	3 1/2 - 3 5/8	50.08	7.09	12.20	3.35	6.89	43.31	6.10	14.76	1433
OWS 18	900	3 5/8 - 3 3/4	55.12	7.87	13.78	3.54	7.52	47.24	7.01	16.77	2023.8

MBL = Minimum Breaking Load | **Mtons =** Metric tonnes | **X =** Depending on the actual wire rope diameter, rope construction and fill factor
Assembly weights may vary depending on the selected configuration

FINISH Hot-dip galvanised with zinc-nickel plated components | Primer RAL 170 60 45 (for OWS 4 - OWS 18)

GLOBAL ROPE FITTINGS
AQUALLINE PRODUCTS