SOLID WIRE ROPE THIMBLES

MORE PRODUCT INFO

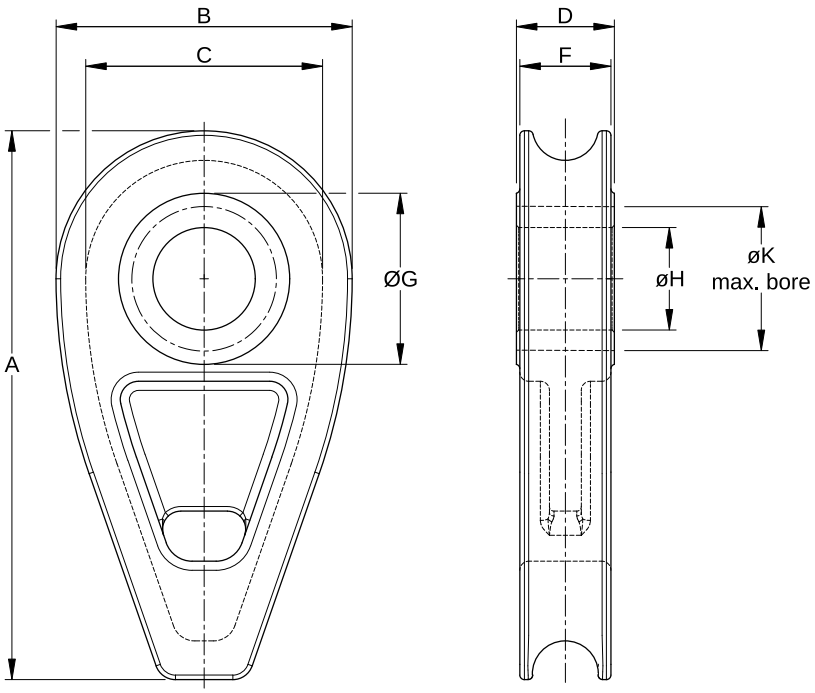

METRIC

MODEL NUMBER	WIRE ROPE Ø (MM)	DIMENSIONS (MM)								WEIGHT (KG)
		A	B	C	D	F	ØG	ØH	ØK	
SWRT 8	7 - 8	74	40	32	15.5	14	28	14	22	0.2
SWRT 10	9 - 10	92	50	40	18	16.5	32	18	27	0.4
SWRT 12	11 - 12	110	60	48	20.5	19	40	21	34	0.6
SWRT 14	13 - 14	128	70	56	24	22.5	45	25	38	0.9
SWRT 16	15 - 16	146	80	64	27	25	50	28	43	1.2
SWRT 18	17 - 18	167	90	72	29	27	54	31	49	1.4
SWRT 20	19 - 20	181	100	80	32	30	58	35	52	2
SWRT 22	21 - 22	204	110	88	34	32	65	40	59	2.4
SWRT 24	23 - 24	222	120	96	37	35	70	42	62	3.3
SWRT 26	25 - 26	235	130	104	40	37	75	45	68	4
SWRT 28	27 - 28	259	140	112	43	40	80	48	72	5
SWRT 32	30 - 32	297	160	128	47	44	90	53	82	6.5
SWRT 36	34 - 36	334	180	144	54	51	100	60	90	10
SWRT 40	38 - 40	366	200	160	60	56	118	65	105	12.5
SWRT 44	42 - 44	403	220	176	64	60	125	70	112	16.5
SWRT 48	46 - 48	440	240	192	70	66	140	76	125	25.2
SWRT 52	50 - 52	476	260	208	75	71	150	82	135	27
SWRT 56	54 - 56	514	280	224	82	78	160	88	145	38.8
SWRT 64	58 - 64	586	320	256	92	88	180	95	165	50
SWRT 72	68 - 72	659	360	288	103	98	200	105	180	70
SWRT 80	76 - 80	720	400	320	115	109	220	115	200	100

K = Maximum machined diameter

FINISH Hot-dip galvanised | Primer RAL 170 60 45 (for SWRT 22 - SWRT 80)

GLOBAL ROPE FITTINGS
AQUALLINE PRODUCTS