ADJUSTABLE CLOSED TURNBUCKLE SOCKETS

MORE PRODUCT INFO

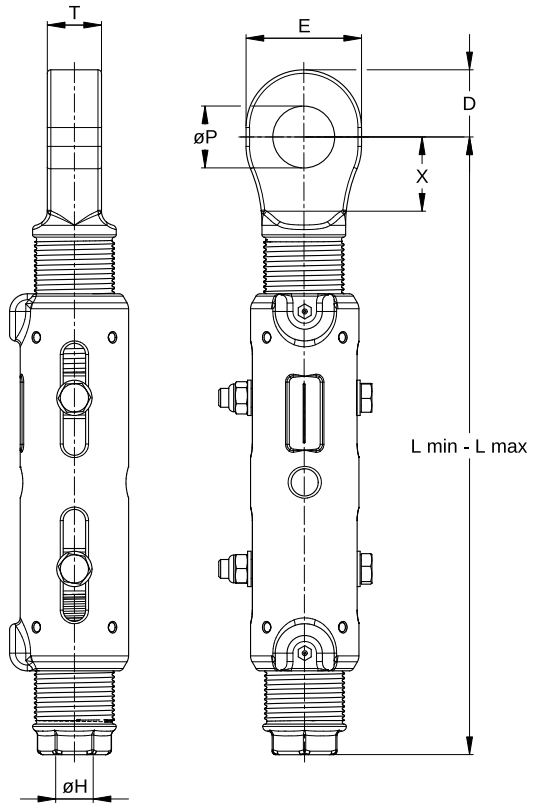

IMPERIAL

MODEL NUMBER	MBL (MTONS)	WIRE ROPE Ø (INCH)	APPROX. RESIN VOLUME (CC)	DIMENSIONS (INCH)									WEIGHT (LBS)
				D	E	ØH	ØP	T	X	L MIN	L MAX	ADJUSTMENT RANGE	
ACTS 800	40	3/4	80	1.57	2.68	0.89	1.44	1.34	2.17	13.19	17.52	4.33	17
ACTS 804	55	7/8	125	1.89	3.15	1.06	1.67	1.57	2.36	14.96	20.08	5.12	24.3
ACTS 808	80	1	160	2.28	3.86	1.16	2.09	1.77	2.95	17.13	23.03	5.90	34.4
ACTS 811	100	1 1/8	210	2.52	4.25	1.34	2.32	2.05	3.35	19.29	25.98	6.69	51.8
ACTS 815	130	1 1/4 - 1 3/8	350	2.83	4.88	1.57	2.56	2.28	3.94	23.03	30.51	7.48	70.1
ACTS 818	160	1 1/2	425	3.27	5.51	1.75	2.83	2.99	4.13	24.80	32.68	7.88	99.2
ACTS 820	200	1 5/8	500	3.35	5.83	1.89	3.07	2.99	4.53	26.77	35.43	8.66	132.3
ACTS 825	250	1 3/4 - 1 7/8	700	3.86	6.69	2.09	3.58	3.23	5.31	31.89	41.73	9.84	194

MBL = Minimum Breaking Load | **Mtons =** Metric tonnes

FINISH Zinc-nickel plated with additional primer RAL 170 60 45 on connector tube