CASE CONSTRUCTION

B SERIES

SKID STEER LOADERS

SR130B | SR150B | SR175B | SR200B | SR220B | SR250B
SV185B | SV250B | SV300B

ACROSS HISTORY

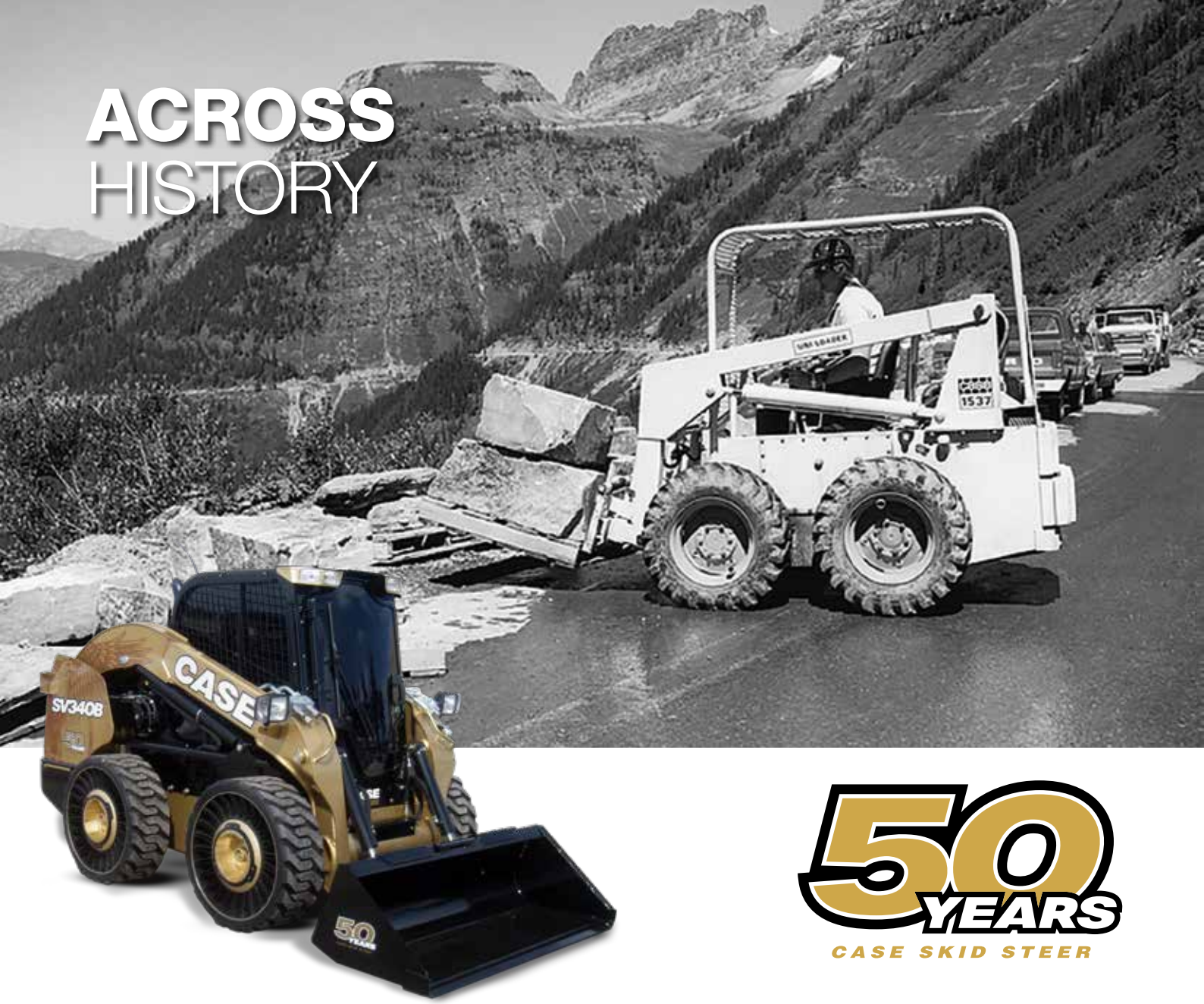

50 YEARS
CASE SKID STEER

1842
CASE is founded.

1969
CASE begins skid steer loader production with the first model the 1530 Uni-Loader.

1995
CASE initiates co-branding and supply agreements with several key suppliers for power and application attachments as well as quick couplers.

1998
The exclusive Ride control is introduced on loader backhoes and skid steer loaders: another CASE first.

2011
CASE launches brand new series of skid steer and compact track loaders.

2015
New Tier 4 Final / EU Stage IIIB models further enrich CASE skid steer and compact track loaders offering.

2017
CASE introduces upgraded 90 hp models with increased performance and SCR only Tier 4 Final / Stage IV technology. Wichita plant achieves the recognition of Silver Level in WCM (World Class Manufacturing), a methodology applied to improve quality by increasing the plants efficiency. On March 13, 2017 CASE sold its the 300,000th skid steer loader/compact track loader.

2019
CASE celebrates 50 years of reliability and high performances: skid steer loaders built tough with more power and torque along with unparalleled productivity and operator comfort

2020
The new B-Series is launched to begin a new half century of best-in-class skid steer loaders / compact track loaders.

CASE
SR200B

CASE
SV300B

MAIN REASONS
TO CHOOSE THE SSL

OUTSTANDING VISIBILITY

Wide window areas for great
all around visibility in all conditions.

OPERATOR COMFORT

Low threshold for best in class
accessibility and smaller pods
for EH controls.

RADIAL AND VERTICAL BOOM

Radial for digging and pushing,
vertical for loading and carrying.

OPTIMAL PUSHING POWER

Loader supports positioned in the bottom part of the
chassis maximize machine performances in loading
applications.

HIGH VERSATILITY

Easy connection and disconnection
of the attachment hydraulic line.

SAFE AND EASY MAINTENANCE

All service items grouped together to facilitate
daily maintenance activities.

OPERATE BUTTON

Optimized start up procedure for more intuitive interaction.

IMPROVED INSTRUMENT CLUSTER

Better positioning to grant all around operator control.

COMFORTABLE JOYSTICK SHAPE

Narrower grip and smaller head size for better operator comfort.

DRIVE MOTOR PUMP CONTROLS

Improved straight line tracking on EH machines.

OPERATE BUTTON AND IMPROVED INSTRUMENT CLUSTER

Thanks to the optimized start up procedure and improved instrument cluster position, CASE skid steers are now easier and more intuitive to operate.

DO MORE
EVERYWHERE

DRIVE MOTOR PUMP CONTROLS

The improved hydrostatic pump controller on EH machines allows the operator to maintain a straighter path without having to make adjustments.

COMFORTABLE JOYSTICK SHAPE

- Narrower palm grip for better ergonomics
- Closer switch layout and smaller head size for easier operation
- Smaller EH pods with more legroom for the operator' comfort

SAFE AND EASY MAINTENANCE

Convenient cab tilting.
With just two retaining bolts, the cab is easy to tilt, providing access to hydraulic and transmission components when necessary.

A safety locking system that prevents the cab from dropping is automatically activated.

Best-in-class serviceability.
Easy access, daily service points grouped together and remote mounted filters mean it's easy to keep all CASE skid steers working to their maximum efficiency.

DO MORE
EVERYWHERE

OPTIMAL PUSHING POWER

The cylinder geometry optimizes the skid steer's push and pull power, while the bucket support bearing directly on the chassis further adds to its pushing power.

HIGH VERSATILITY

The hydraulic system delivers fast cycle times. The Connect Under Pressure (CUP) system allows the operator to plug hydraulic tool hoses with no wrenches.

RADIAL AND VERTICAL BOOM

CASE has revised its skid steers line up to boost performance and productivity for an ever wider range of customers. The revised CASE skid steers range includes radial lift skid steers (SR models) and vertical lift skid steers (SV models).

OUTSTANDING VISIBILITY

The large glass area with ultra-narrow wire lateral protection, the lowered threshold and the thinner front pillars provide the best visibility in the market (ROPS / FOPS cab).

DO MORE
EVERYWHERE

OPERATOR COMFORT

The wide door, the grab handles and the lower threshold provide easy access to the cab. All the closed cab models have suspension seats and optional air suspension heated seats for the ultimate in comfort.
The cab is completely sealed to reduce the amount of noise and dust thanks to the full cab glazing and door. Our cab - the widest in the industry - provides plenty of room for comfortable operation, with greater headroom and legroom, more space between the control levers and easy access to the seat.

CASE
SV185B

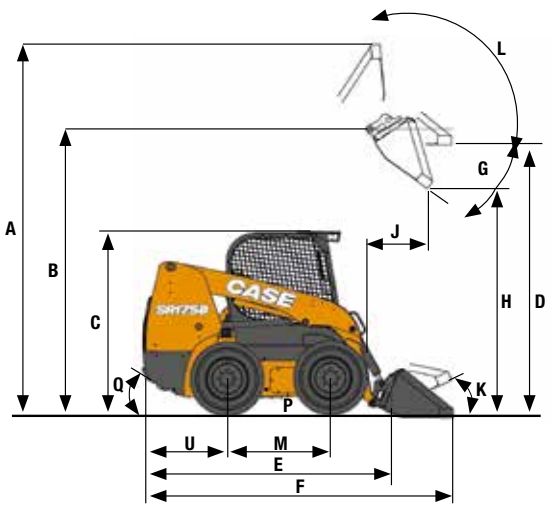

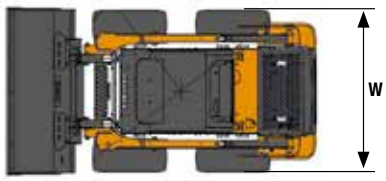

GENERAL DIMENSIONS

		SR130B	SR150B	SR175B	SR200B	SR220B	SR250B
A - Overall Height w/ LPE Bkt	mm	3859	3859	4121	4146	4198	4198
B - Bucket Hinge Pin	mm	2845	2845	3099	3124	3178	3178
C - Top Of ROPS	mm	1919	1919	1974	1998	2002	2002
D - Bottom of Bkt Fully Raised	mm	2682	2682	2925	2950	2998	2998
E - Length w/o Attachment	mm	2435	2435	2685	2669	2981	2981
F - Length w/ LPE Bkt	mm	3297	3297	3538	3525	3843	3843
G - Dump Angle	°	40.2	40.2	39.6	39.6	38.1	38.1
H - Dump Height w/ LPE Bkt	mm	2073 @ 40.2°	2073 @ 40.2°	2322 @ 39.6°	2347 @ 39.6°	2419 @ 39.6°	2419 @ 39.6°
J - Dump Reach w/ LPE Bkt	mm	675 @ 40.2°	675 @ 40.2°	721 @ 39.6°	696 @ 39.6°	677 @ 39.6°	677 @ 39.6°
K - Max Rollback at Ground	°	26.12	26.12	31.6	31	30.7	30.7
L - Max Rollback Fully Raised	°	95.2	95.2	98.6	98.6	99.7	99.7
M - Wheelbase	mm	941	941	1128	1128	1322	1322
P - Ground Clearance	mm	178	178	178	203	203	203
Q - Angle of Departure	°	22	22	23	25	23.5	23.5
U - Rear Axle to Bumper	mm	858	85	924	924	1034	1034
W - Overall Width (Spec Tire)	mm	1518	1518	1642	1755	1768	1768

SPECIFICATIONS

PERFORMANCE SPECS		SR130B	SR150B	SR175B	SR200B	SR220B	SR250B
Rated Operating Capacity 50%	kg	590	680	790	905 kg	1000	1135
Tipping Load	kg	1179	1361	1588	1814	2000	2270
Lift Cylinder Breakout Force*	kN	12.7	14.1	16.9	20.3	24.4	25.3
Bucket Cylinder Breakout Force*	kN	18.6	18.6	32.3	32.3	38.7	33.3
ENGINE		**SR130B**	**SR150B**	**SR175B**	**SR200B**	**SR220B**	**SR250B**
Engine Brand		PERKINS	PERKINS	PERKINS	FPT	FPT	FPT
Engine Model		404D-22	404D-22T	404D-22T	F5C E5454 G*A001	F5C E5454 B*A005	F5C E5454 C*A003
Displacement	l	2.2	2.2	2.2	3.2	3.2	3.2
Horsepower Gross	kW	36.4 @ 2800	44.7 @ 2800	44.7 @ 2900	55 @ 2500	61 @ 2500	67 @ 2500
Peak torque	N·m	143 @ 1800	171 @ 1800	171 @ 1800	275 @ 1400	305 @ 1400	340 @ 1400
TRAVEL SPEED		**SR130B**	**SR150B**	**SR175B**	**SR200B**	**SR220B**	**SR250B**
Low Range	Km/h	12.7	12.7	12.7	10.9	11.3	11.3
High Range (Optional)	Km/h	18	18	18	15.9	16.9	16.9
HYDRAULIC SYSTEM		**SR130B**	**SR150B**	**SR175B**	**SR200B**	**SR220B**	**SR250B**
Pump flow 100%	Lpm	59	59	72	85	85	85
Displacement	cc	20.4	20.4	24.9	34.1	34.1	34.1
WEIGHTS		**SR130B**	**SR150B**	**SR175B**	**SR200B**	**SR220B**	**SR250B**
Operating Weight	kg	2344	2474	2881	3184	3436	3547
Shipping Weight	kg	2160	2300	2705	3025	3200	3340
SERVICE CAPACITY		**SR130B**	**SR150B**	**SR175B**	**SR200B**	**SR220B**	**SR250B**
Fuel Tank	l	60.5	60.5	75.7	75.7	96.5	96.5

* Breakout forces estimated considering both tip and hydraulic limits

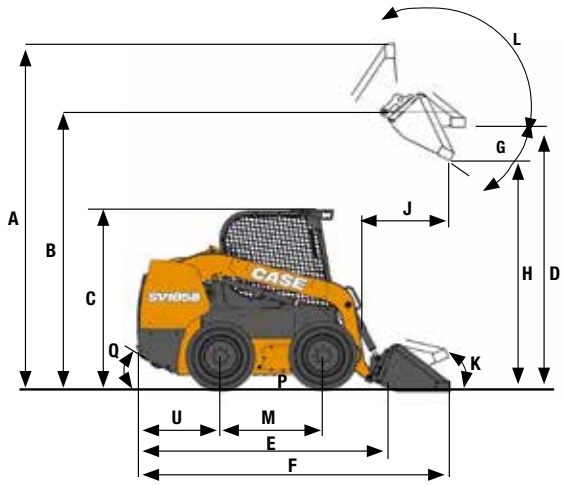

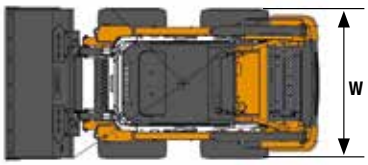

GENERAL DIMENSIONS

		SV185B	SV250B	SV300B
A - Overall Height w/ LPE Bkt	mm	4055	4304	4304
B - Bucket Hinge Pin	mm	3048	3302	3302
C - Top Of ROPS	mm	1974	2002	2002
D - Bottom of Bkt Fully Raised	mm	2877	3038	3038
E - Length w/o Attachment	mm	2685	2990	2990
F - Length w/ LPE Bkt	mm	3578	3835	3835
G - Dump Angle	°	51.9	53.5	53.5°
H - Dump Height w/ LPE Bkt	mm	2214 @ 45°	2465 @ 45°	2465 @ 45°
J - Dump Reach w/ LPE Bkt	mm	946 @ 45°	837 @ 45°	837 @ 45°
K - Max Rollback at Ground	°	35	35	35
L - Max Rollback Fully Raised	°	87.6	86	86
M - Wheelbase	mm	1128	1322	1322
P - Ground Clearance	mm	178	203	203
Q - Angle of Departure	°	23	23.5	23.5
U - Rear Axle to Bumper	mm	924	1034	1034
W - Overall Width (Spec Tire)	mm	1642	1768	1768

SPECIFICATIONS

PERFORMANCE SPECS		SV185B	SV250B	SV300B
Rated Operating Capacity 50%	kg	840	1135	1364
Tipping Load	kg	1678	2270	2727
Lift Cylinder Breakout Force*	kN	15.3	21.4	25.5
Bucket Cylinder Breakout Force*	kN	24.7	33.7	33.7
ENGINE		**SV185B**	**SV250B**	**SV300B**
Engine Brand		PERKINS	FPT	FPT
Engine Model		404D-22T	F5C E5454 B*A005	F5C E5454 C*A003
Displacement	l	2.2	3.2	3.2
Horsepower Gross	kW	44.7 @ 2900	61 @ 2500	67 @ 2500
Peak torque	N·m	171 @ 1800	305 @ 1400	340 @ 1400
TRAVEL SPEED		**SV185B**	**SV250B**	**SV300B**
Low Range	Km/h	12.7	11.3	11.3
High Range (Optional)	Km/h	18	16.9	16.9
HYDRAULIC SYSTEM		**SV185B**	**SV250B**	**SV300B**
Pump flow 100%	Lpm	72	85	85
Displacement	cc	24	34.1	34.1
WEIGHTS		**SV185B**	**SV250B**	**SV300B**
Operating Weight	kg	3019	3687	3822
Shipping Weight	kg	284	3475	3610
SERVICE CA		**SV185B**	**SV250B**	**SV300B**
Fuel Tank	l	75.7	96.5	96.5

* Breakout forces estimated considering both tip and hydraulic limits

CASE CONSTRUCTION

SINCE 1842

BUILDING A STRONG CASE.

Since 1842, at CASE Construction Equipment we have lived by an unwavering commitment to build practical, intuitive solutions that deliver both efficiency and productivity.

We continually strive to make it easier for our customers to implement emerging technologies and new compliance mandates.

Today, our global scale combined with our local expertise enables us to keep customers' real-world challenges at the center of our product development.

The vast CASE dealers' network is always ready to support and protect your investment and exceed your expectations, while also providing you with the ultimate ownership experience.

Our goal is to build both stronger machines—and stronger communities. At the end of the day, we do what's right for our customers and our communities so that they can count on CASE.

CaseCE.com

NOTE: Standard and optional fittings can vary according to the demands and specific regulations of each country. The illustrations may include optional rather than standard fittings - consult your Case dealer. Furthermore, CNH Industrial reserves the right to modify machine specifications without incurring any obligation relating to such changes.

Conforms to directive 2006/42/EC

creative-farm.it 02/21