FIBREPATH

Click for detailed information

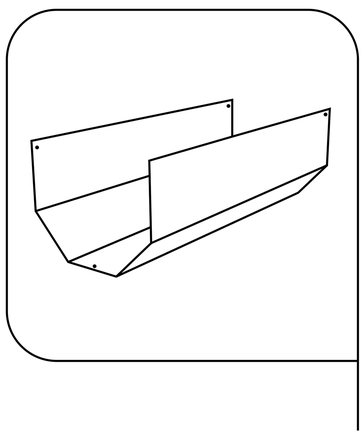

XS-600-03-Y

600W Cable Basket

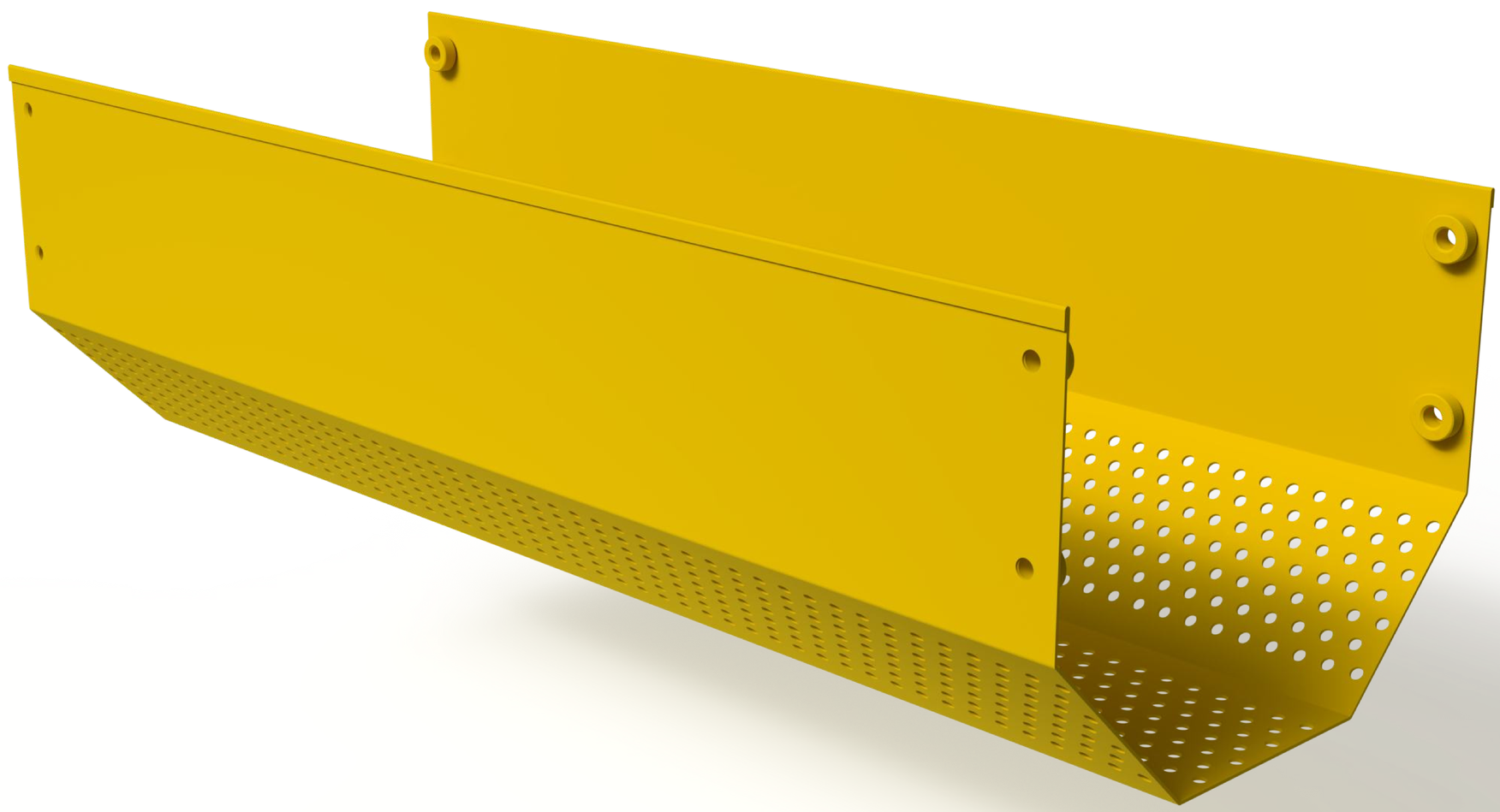

Product Information

Material: Mild Steel

Thickness: 1.2mm v8

Weight: 1.710 kg

Colour: RAL 1023

Product Overview

Fire-rated modular fibre basket system, designed to accommodate 600mm (W) sections for extending the FibrePath system.

MADE IN BRITAIN

+44 (0)124 232 3646 | info@xspaceuk.com | www.xspaceuk.com

Scan QR code to Visit Our Website