FIBREPATH

Click for detailed information

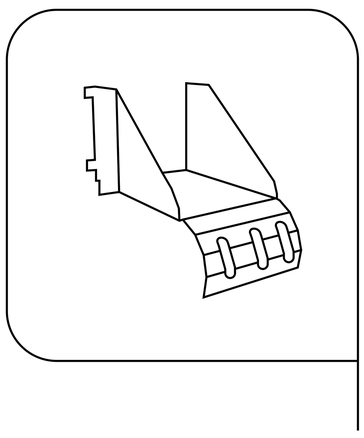

FP-RCF-10-B

Cable Fall

Product Information

Material: Mild Steel

Thickness: 1.2mm

Weight: 0.233 kg

Colour: RAL 9005

Product Overview

Cable fall to be used for cables exiting the FibrePath basket, offering support and limiting the bend radius of the cables.

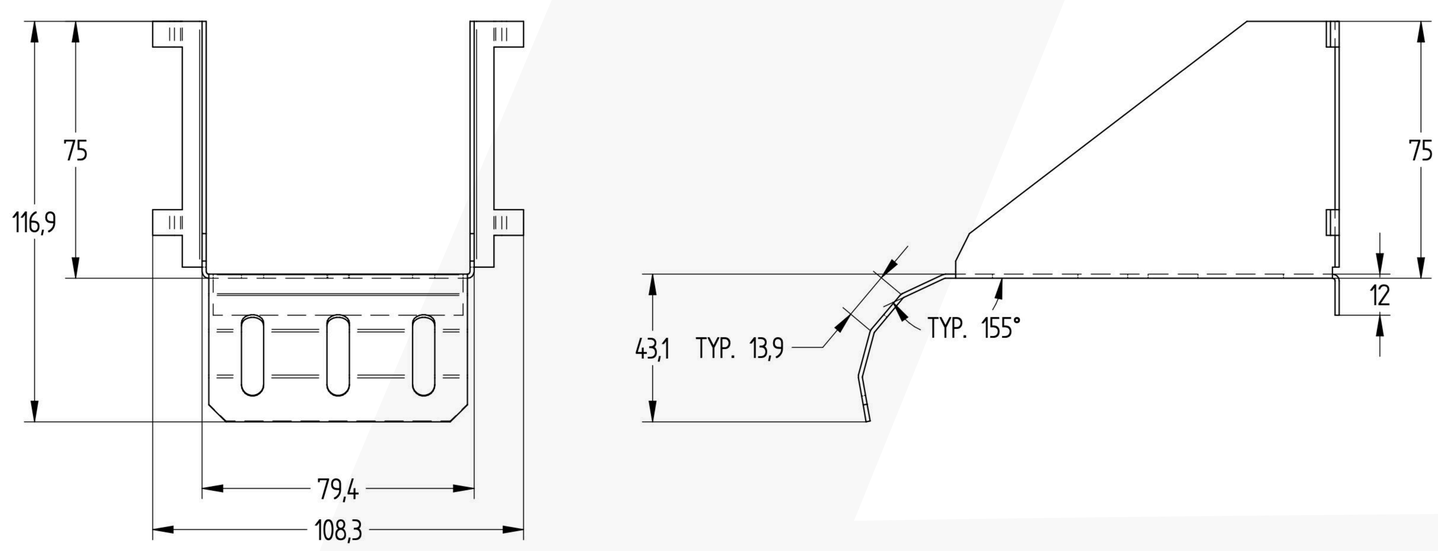

MADE IN BRITAIN

+44 (0)124 232 3646 | info@xspaceuk.com | www.xspaceuk.com

Scan QR code to Visit Our Website