REVISIONS			
REV.	DESCRIPTION	DATE	APPROVED

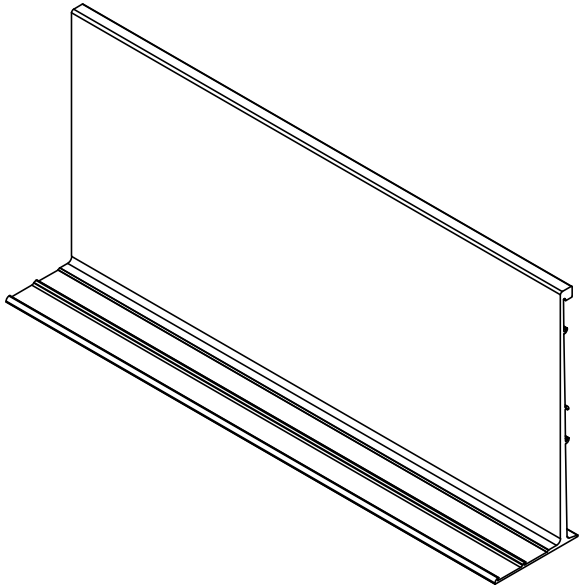

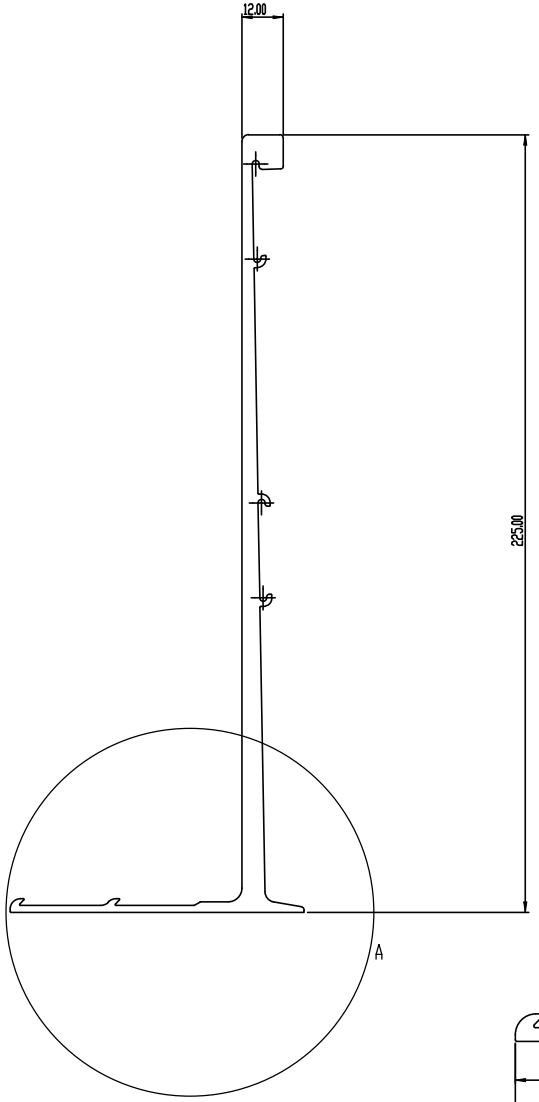

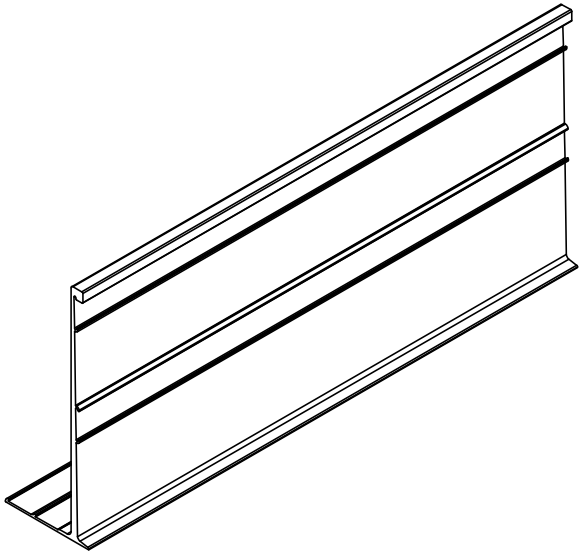

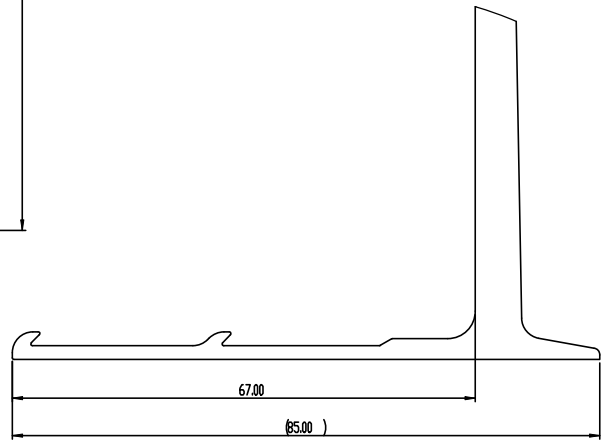

DETAIL A
SCALE 2 : 1

REMOVE ALL BURRS AND SHARP EDGES

NOTE:
FOR MISSING DIMENSIONS,
PLEASE REFER TO CAD
FILE AT LATEST ISSUE

PROPRIETARY AND CONFIDENTIAL.
ALL INFORMATION CONTAINED IN THIS DRAWING IS THE SOLE PROPERTY OF KINLEY SYSTEMS LTD.
ANY REPRODUCTION IN PART OR AS A WHOLE IS PROHIBITED WITHOUT THE WRITTEN PERMISSION OF KINLEY SYSTEMS LTD

TOLERANCE UNLESS OTHERWISE SPECIFIED		DO NOT SCALE DRAWING		NAME	DATE
		TOLERANCES APPLY AFTER PLATING	DRAWN	BS	09/05/2023
			CHECKED		
UNIT	METRIC				
XX	±0.25	MATERIAL: ALUMINIUM ALLOY	SPECIFICATION: -		
XXX	±0.1				
ANGLES	±0.5 °				
▱ ⊥ —	0.25 TIR	FINISH: MILL FINISH	SPECIFICATION: -		
⌯ // ◎○	0.12 TIR				

Kinley Systems LTD

DESCRIPTION: APEX 225

SIZE	DWG. NO.	REV.
A2	APEX 225 - PLANTER EDGE	
SCALE:04	WEIGHT:	SHEET 1 OF 1