Mata™
Solid Waste Interceptor
Operations and Maintenance

ADDRESS

WaiHome LLC
P O BOX 235897
Honolulu, HI 96823, USA

CONTACT

808-970-7245
www.waihome.com

DOCUMENT

MAI-MAN-001_Maintenance_Manual
Rev.3 © 10/26

All product and performance assertions are based on proper design, installation, operation, and maintenance according to WaiHome's current published documentation.

Table of Contents

Introduction: Mata™ Solid Waste Interceptor Operation	3
Typical Site Plan for a Mata Solid Waste Interceptor	3
Standard Unit Components	4
Alarms and Monitoring	4
Standard Settings for Mata Control Systems	5
Viewing and Changing Parameter Blocks	6
Setting a Solids Management Schedule	7
Solids Bin Swap Procedure	8
Carbon Filter Replacement	9
Long-Term Maintenance Schedule	9
Emergency Maintenance Events	9

Introduction: Mata™ Solid Waste Interceptor Operation

This supplement contains information to help you successfully operate and maintain the Mata™ solids separation and dehydration system. The Mata operates differently from conventional septic or recirculating treatment systems and is designed as a single, aboveground unit that performs primary solids separation and dehydration. Because the Mata relies on mechanical components for the treatment process, proper installation and regular maintenance are critical to ensure reliable operation and long-term performance.

A key distinction is that the Mata does not rely on passive settling or biological treatment within a tank. Instead, raw sewage enters the unit and flows directly onto a mechanically assisted screening system. Settleable and floatable solids, including fecal matter and toilet paper, are captured on the screen and conveyed via an auger into a solids chamber for dewatering and storage. Liquids pass through the screen and collect in the bottom of the unit. As liquid accumulates, a latching float switch activates the pump and auger system. The pump evacuates liquid effluent to downstream treatment or disposal while the auger simultaneously advances captured solids into the solids chamber until the water reaches the latching float's low level. Dose volume for the discharge pump system is determined by adjustments to the "ON" and "OFF" shaft clamps on the latching float. The Mata is designed for flow through gravity operation during temporary power outages.

The dehydrator's operation is controlled by the PLC in the control panel. It allows the heater to turn on for a set period every set number of pump events.

Typical Site Plan for a Mata Solid Waste Interceptor

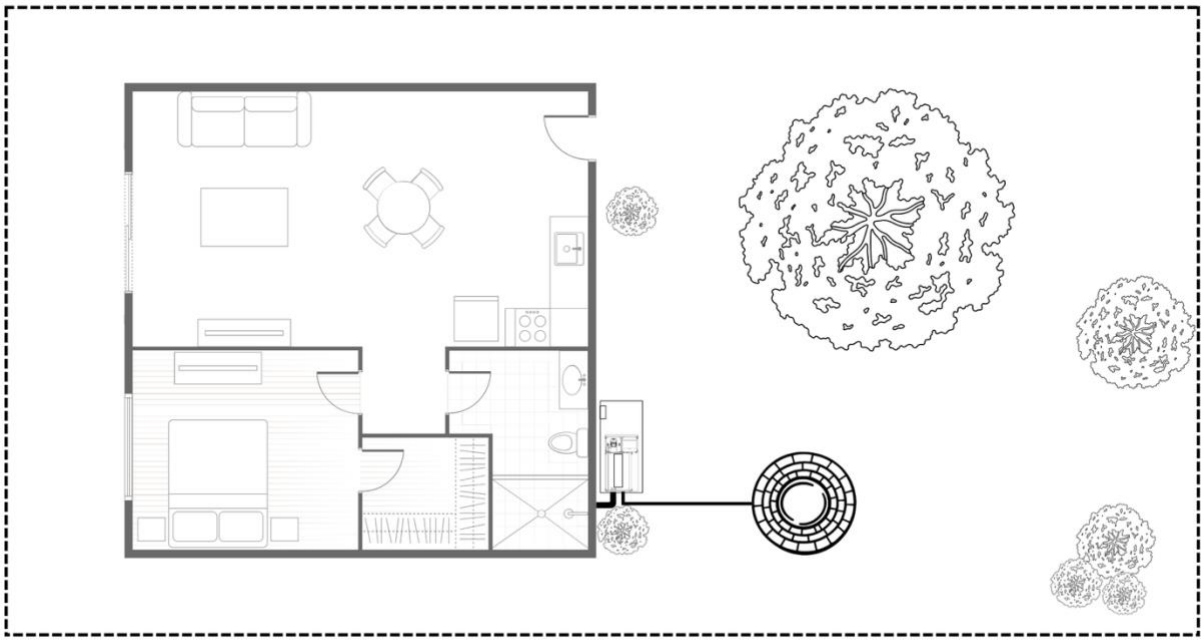

Standard Unit Components

1. 3" SEWER IN
2. 1.5" DISPOSAL PIPE
3. AUGER SCREEN
4. DIVERSION FITTING
5. AUGER MOTOR
6. PUMP
7. FLOAT SWITCH
8. SEPARATION TANK
9. SOLIDS BIN (FILLING POSITION)
10. SOLIDS BIN (AGING POSITION)
11. HEATING LOOP
12. OUTLET VENT SUB-ASSEMBLY
13. JUNCTION BOX
14. SCREEN OVERFLOW
15. SOLIDS BAG
16. AUGER
17. BASE PLATE
18. ONE WAY GRAVITY DRAIN VALVE
19. EMERGENCY FLOATS
20. COLLAR
21. CONTROL BOX

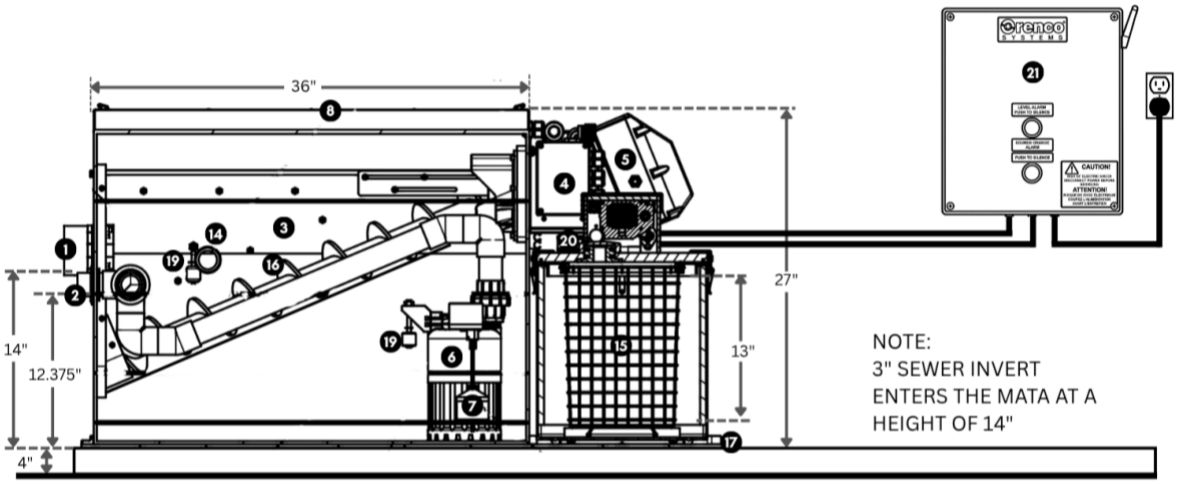

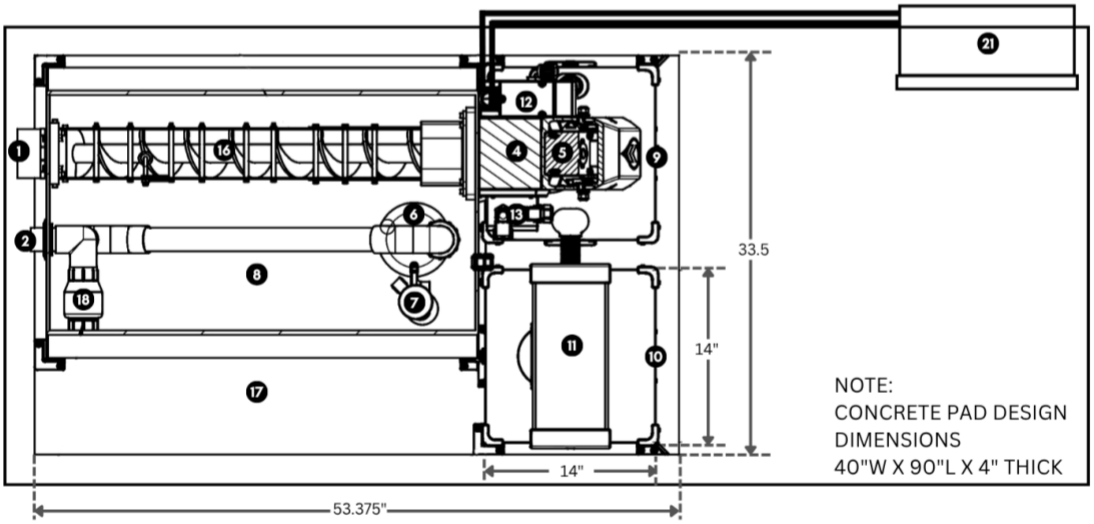

Alarms and Monitoring

The Mata features a top-of-the-line control system that connects via Wi-Fi to provide status updates. This system is designed to notify WaiHome if any operational anomalies occur.

- *Automated Alarms:* The system monitors for several critical conditions, including:
  - High Water Alarm: Triggered if tank levels exceed safe operating parameters.
  - *Component Malfunctions:* Detects issues with the auger motor or heater.
- *Usage Tracking:* The control system tracks usage patterns to predict and schedule servicing needs. Dehydration times and emptying frequencies should be set conservatively initially and tuned by a WaiHome approved technician based on usage.

The audible alarm can be silenced by momentarily pressing the lit button on the front of the control panel. Alarm will only turn on during the daytime. Even then it will cycle on and off for a set period after a pump event to prevent alarms while nobody is home.

Standard Settings for Mata Control Systems

Mata uses Orenco's MVP control panel for system control. The MVP panel includes an easy-to-use programmable logic unit that incorporates many timing and logic functions. Some operational parameters may need changing for your particular application. The following variables have been used with your control panel:

Variable	Function	Factory Default
PumpOnDelay	Delays turning pump on after working float triggers	10 sec
EmerPumpTim	Minimum time pump is on after emergency float triggers	10 sec
EmerOnDelay	Delays turning pump on after emergency float triggers	10 sec
PumpCycTime	On/off cycle times if pump is on for extended period	4 min / 1 min
PumpTimeMax	Time pump is on before alarm triggered	10 min
SilenceTime	Time alarm is silenced before going on again	12 hours
MaxSolidsCnt	Pump Cycle Based Bin Swap Frequency	500/0/Cnt/0
SwapStart	Length of button press to start solids emptying process	3 sec
PumpLivesCnt	Running count of pump counter resets	30,000/0/Cnt/0
PumpCount	Running count of pump events and reset frequency	30,000/0/Cnt/0
HeatCount	Pump cycles between heat events (reduce for drier solids)	20/0/Cnt/0
HeatPulse	Pulse length signaling heat on	1 sec
PumpOvertime	Pump cycles where the pump ran too long	0/0/Cnt/0
Location	Set to avoid alarms during night	GMT-10
Swap Period	Time before pump/auger automatically unfreeze from swap	60 min
SolLightFlik	Solid light flicker period during swap	2 sec / 2 sec
Change Beeps	Frequency of beeps during swap	00:20 sec / 1 min
HeatTime	Heat cycle length	3 hrs / 0 hrs
HighLvlCnt	Running count of high level alarms	0/0/Cnt/0
SwapStop	Length of button press to end solids emptying process	6 sec
TimeBased	If On, solids changes based on time (DayCounter), if Off, based on use (MaxSolidsCnt)	On
DayTimer	Tracks passage of days	24 hours / Cnt
DayCounter	Set days to desired solids change cycle frequency	Days/0/Cnt/0
Pulse	Communication pulse setting	00:01 min / 00:01 min
SwapPulse	Swap pulse setting	10 sec / 1:01 sec
WifiPress	Hold down level alarm button to trigger wifi setup	5 sec
Plc2PiTime	Communication Setting	12 sec
ScreenDelay	Delays turning pump on after screen float triggers	5 sec
Changed Beep	Length of beep after button hold to stop bin swap	00:50 sec / 1 min
HeatOnDelay	Time delay on dehydrator turning on	5 min

AlarmCycle	Alarm on-off period during alarm condition	1 min / 14 min
TimeBaseHeat	If On, heat cycles based on schedule (HeatSched), if Off, based on use (HeatCount & HeatTime)	On
AlarmOnTime	Alarm will only turn on during this set period after a pump event	60 min
HeatSched	If TimeBaseHeat is on, this is the On schedule for heating	MTWTFSS/12:00/ 15:00

Viewing and Changing Parameter Blocks

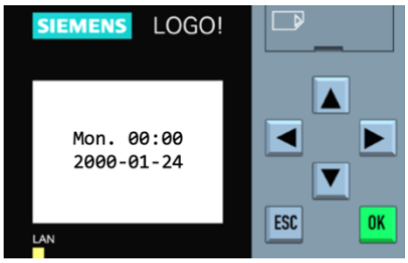

Step 1: To begin the configuration process, press the "**ESC**" key.

Step 2: Press ˅ on the unit to select "**Program**". Then press the "**OK**" key.

Warning: Do not select "Stop". Doing so may erase then panel programming. If this is selected by accident, press the "ESC" key to cancel.

Step 3: Press "**OK**" to select "**Set Parameter**".

Step 4: Press ˄ or ˅ to select the desired parameter to adjust and press "**OK**". Continue to **Step 5** on the following pages for the specific block type being edited.

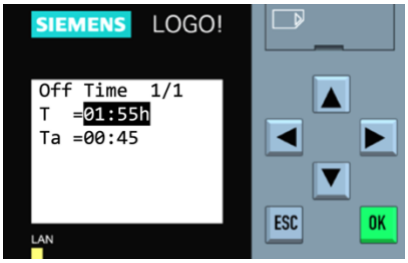

Step 5: In this example, the set time is 1 hour and 55 minutes, "**T=01:55h.**" To change the set value for the parameter, press the "**OK**" key. Press "**ESC**" key if you only wished to view the parameter.

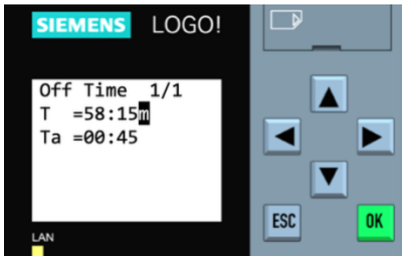

Step 6: The cursor will blink in the set value. To select the digit to be changed, press ˂ or ˃. To change the value of a digit, press ˄ or ˅.

In this example, the set value has been changed from 1 hour and 55 minutes to 58 minutes and 15 seconds. (The timebase can be changed from hours = h to minutes = m or seconds = s by moving the cursor to the far right and pressing ˄ or ˅

Setting a Solids Management Schedule

Routine servicing includes removal of processed solids using the solids bin swap procedure described in this manual. If you have a maintenance contract, your technician can track system capacity and perform the solids change as part of scheduled service.

Initial solids emptying settings for a Mata should be set initially based on number of users. Once usage patterns are established, emptying cycles can be based on pump frequency to account for vacation periods and variable occupancy.

Step 1: Set conservative occupancy-based solids bin schedule.

Set TimeBased to On. Set Days in DayCounter according to the following table and household occupancy. (PLC parameter – see "**Viewing and Changing Parameter Blocks**")

Users	1	2	3	4	5	6
Estimated Solids Loading (lbs/day)	0.2	0.4	0.6	0.8	1	1.2
Estimated Fill Cycle Time (days)	60	30	20	14	10	7

Step 2: For first 6 months of operation, before conducting the bin swap procedure, record Cnt in MaxSolidsCnt (PLC parameter – see "**Viewing and Changing Parameter Blocks**") as well as how full the filling bin is. Cnt divided by % Full will give an estimated value for Max.

Bin Swap	1	2	3	4	5	6	7
Cnt	300						
% FULL	75%						
Max	400						

Step 3: Set Cnt in MaxSolidsCnt to 75% of the smallest Max recorded. You may now switch to a usage-based solids bin schedule by changing TimeBased to Off.

Significant changes in normal usage patterns (such as less common showers) may result in bins filling up sooner than predicted.

Solids Bin Swap Procedure

Solids produced by Mata have been heat treated but are not completely sterilized. It is good practice to wear gloves during solids change procedure. Order supply of 7-gallon Tall Grow Bags for future use from WaiHome or online.

The Bin Swap Procedure is also a good opportunity to check for following signs of proper operation:

- Visual Indicators: The PLC inside the control box should be on.
- Acoustic Indicators: You may hear periodic pumping and auger motor sounds during normal operation; these sounds should not exceed 60 dB five feet from the unit.
- Odor Control: There should be no noticeable odor present around the unit.

If any unusual odors or other issues are detected, please contact WaiHome immediately to evaluate the system.

Press and hold Solids Change button until it beeps to start change.

Lift heating loop off the top of the solids bin in the aging position.

Place loop on top of the Mata unit out of the way.

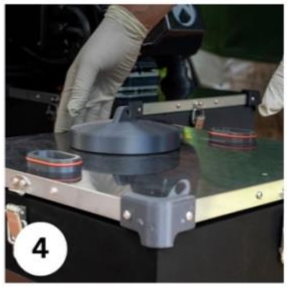

Unlatch the lid of the aging bin and remove it.

Withdraw the bag of aged solids and dispose of them.

Insert new solids bag and fold top of the bag over the basket lip.

Replace lid and move the now empty bin to the side.

Unlatch collar from the neck of the full bin.

Remove vent and slide full bin into aging position.

Remove bin cap from the now empty bin and place it on the full bin.

Move empty bin into the filling position and reattach collar, vents, and heating loop.

Press and holid Solids Change button until it beeps to end change.

Carbon Filter Replacement

The activated carbon filter can be replaced as needed. If media change frequency is excessive, talk to your WaiHome dealer about a biological air filter add-on designed for more humid conditions.

Order supply of 4mm Pellet Activated Carbon for future use from WaiHome or online.

Identify carbon filter to the right of the Mata logo.

Rock carbon filter forwards and backwards to loosen and remove.

Empty used carbon and refill with fresh 4mm pellet activated carbon media.

Press carbon filter back into place.

Long-Term Maintenance Schedule

Beyond routine solids removal, the Mata system requires periodic professional inspections and component replacements to ensure its 20+ year design life:

- Carbon Filter Replacement (Every 6 Months): Ensures the outlet ventilation assembly remains odor-free.
- Annual Inspection (Every 1 Year): A general inspection of all mechanical components and sensors to verify optimal performance.
- Mechanical Overhaul (Every 10 Years): Proactive replacement of the motor and pump units to prevent unexpected downtime.

Emergency Maintenance Events

The Mata may require additional maintenance in the event of emergency conditions.

Power Outages

The Mata Solid Separator requires a consistent electrical supply to perform as designed. The system's advanced monitoring, mechanical separation, and sterilization cycles are all dependent on active power.

Short-Term Outages: For power outages lasting less than 24 hours, the system is designed to remain stable. Once power is restored, the Mata will automatically power up and resume its normal functions. Water is designed to flow through the interceptor by gravity in the interim. Loading should be kept to a minimum to avoid overaccumulation of solids on the screen.

Prolonged Outages: A prolonged power outage will eliminate the efficacy of the system's screening potential and may lead to backups if not addressed.

Required Action: If an electrical outage exceeds 24 hours, the homeowner should contact WaiHome immediately. A service technician may be required to inspect the unit and ensure the system continues to operate as expected once power returns.

Flooding

Where flooding is possible, the Mata Solid Separator should be sited or elevated above anticipated floodwater levels whenever practicable. When anchored to a concrete pad, the Mata Solid Separator is engineered to withstand minor flooding conditions and will continue to operate as designed during such events. Any major flooding where water levels exceed 12" inches will result in the submersion of electrical components, which may cause component failure and create significant electrical hazards. If your system has been subjected to major flooding, do not attempt to inspect or reset the unit. Instead, contact WaiHome immediately to schedule a professional evaluation and repair.

DANGER-ELECTRICAL HAZARD: Any electrical equipment located in flooded areas presents an immediate electrical hazard. You must stay away from the area surrounding the Mata system if flooding is present. Failure to do so may result in electrical shock causing serious injury or death.