Mata™ Solid Waste Interceptor

Standard septic installation can be a challenge in Hawai‘i:

SMALL LOTS

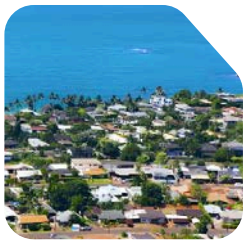

STEEP SLOPES



SHALLOW BEDROCK



COASTAL EXPOSURE



FLOOD RISK



Introducing the IAPMO Certified Mata Solid Waste Interceptor

Mata™ Solid Waste Interceptor is an IAPMO-certified aboveground septic tank alternative for residential applications with raised foundations. Pairing Mata with a converted seepage pit eliminates the need for expensive excavation during cesspool upgrades. Mata is not a composting system; it‘s designed to completely treat residential black and grey water loads, all monitored by an Orenco control panel you can trust.

Features

- Installed on-grade | Affordable, excavation-free
- 1:1 Septic tank replacement
- Enhanced liquid effluent quality
- Works with conventional plumbing fixtures
- Wifi enabled for remote monitoring
- IAPMO Z1167 Listed Product
- Activated carbon-filtered air vent built in



Technical Specifications

Weight	180 Lbs (All Components)
Power	120 V
Max Draw	5.5 Amps
Active Draw	4.25 Amps
Resting Draw	0.4 Amps
Heater Power	300W
Flow Assist Pump	¼ HP with gravity overflow
Material	LDPE, Fiberglass, PVC
Max Capacity per Unit	3 Bedrooms
Max Instataneous Flow	21 GPM



Performance Testing

Total Suspended Solids: 90% Removal
BOD5: 87% Removal (Solid Fraction)
Nitrogen: 23% Removal (Solid Fraction)
3rd party test results available at www.waihome.com/about

©2026

Mata™ Solid Waste Interceptor

808.970.7245
Info@WaiHome.com
WaiHome.com

Elevation

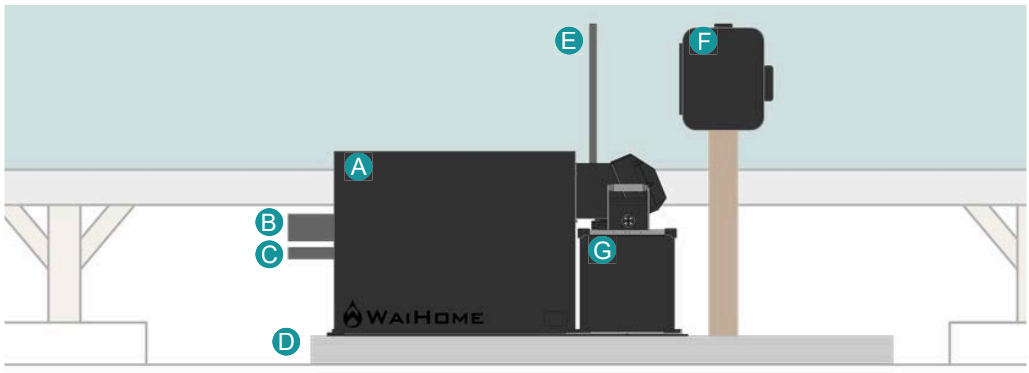

- A Separator Tank
- B 3" Sewer inlet
- C 1.5" Liquid effluent outflow
- D New or existing level foundation
- E 1" Exhaust vent
- F Orenco Control Panel
- G Solids Drying Bin

How Mata Works

Wastewater flows into the Mata via the 3" inlet; an auger screen separates solids while liquids drain to the bottom of the separator tank. An auger diverts solids to the solids bin for drying. Separated liquids are pumped out via the effluent pipe to disposal.

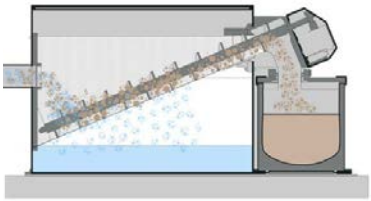

Solids Bin Exchange

Expect solids bins to be exchanged every 1 - 12 weeks based on home occupancy. Dried solids can be disposed or reused per local regulations.

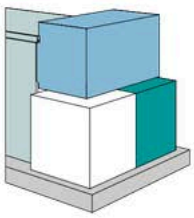

Mata runs for 1-12 weeks.

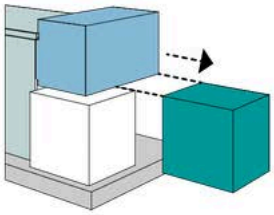

Remove solids bin with aged solids.

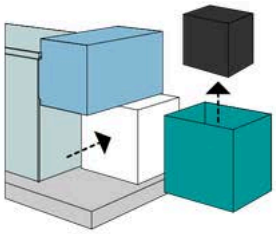

Withdraw aged solids. Slide fresh bin over for aging.

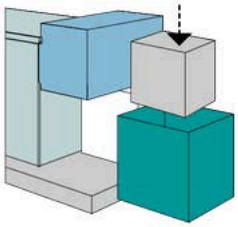

Insert new solids bag.

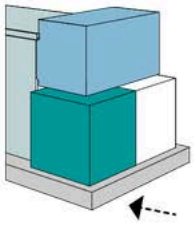

Position empty bin to receive new solids.

Product Dimensions

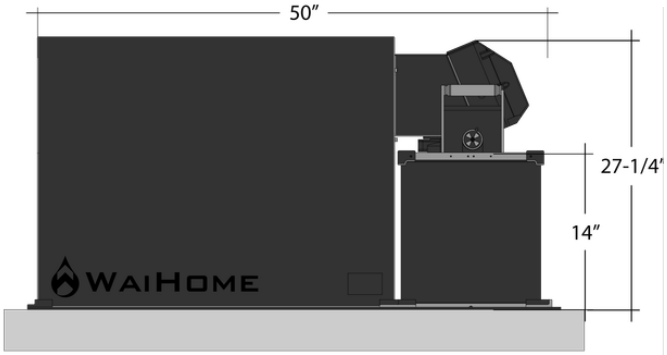

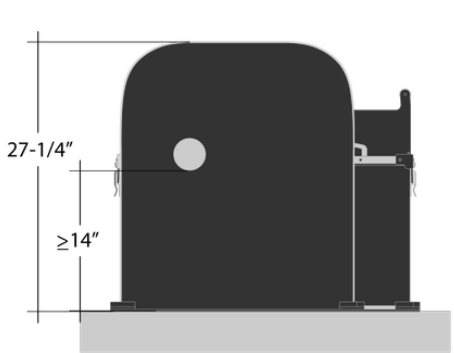

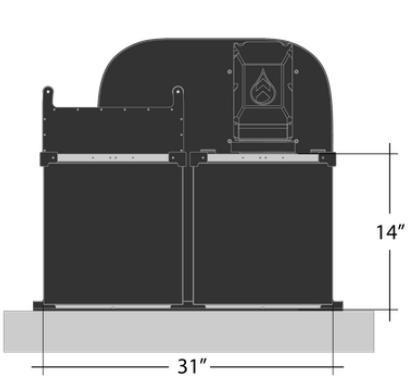

©2026

WAIHOME