TS SYSTEM CATALOG

003 INTRODUCTION
012 CONTENTS
016 TS SYSTEM
084 USER MANUAL

CEO's Message

Providing cutting edge technology and superior quality

Making products that dentists want to use, trust, and are satisfied with :
This is our mission at OSSEM IMPLANT

We are forever grateful to all the dentists who have given unwavering support to OSSTEM IMPLANT

Thank you for using Osstem Implant. Osstem, Korea's first implant manufacturer, has secured world-class implant competitiveness through continuous R&D investment and quality innovation.
It has grown to become Asia-Pacific No.1 and World No.5 Implant Company. In addition to dental implants and treatment tools, we are leading the development of products that are essential for dentists, including dental equipment, dental materials, and dental IT, and contribute to the development of the dental industry.
The comprehensive catalog of the 2018-19 product series published here shows Osstem's technology-rich products.
We have focused on catalog structure so that it is convenient to browse and order products. In particular, in the case of fixtures, abutments, and surgical tools, we introduced the diameter, length, and functions in detail.

GBR products are also easy to order by type, size and capacity. In addition, the product release date and time are displayed so that customers can understand when the existing product is released and what the newly released product is. We also introduced the CAD/CAM product in terms of preparing the digital dentistry, a major trend in the dentistry. In terms of design, we also implemented high-quality images of representative products by specification. By applying representative colors for each product system, it is easy to sort by category. We hope this will help you effectively find and purchase the products you need from the dental clinic of 2018-19. Osstem Implant will continue to develop products that the dentist can trust. We will work to create greater customer value. Thank you.

CEO of OSSTEM IMPLANT
Choi Kyu-ok (DDS.Ph.D)

Worldwide & History

1997

01 Established 'Osstem Co., Ltd.'

12 Released 'Doobunae' (health insurance claim application software program)

2000

06 Released 'Hanaro' (dentistry management software)

10 Acquired sumin comprehensive dental materials

2001

01 Obtained CE-0434 certification

03 Established AIC training center

2002

01 Established Osstem Implant R&D center

08 Obtained FDA certification, launched USII line

10 Launched SSII line

2006

03 Changed the company name to Osstem Implant Co., Ltd

04 Obtained GOST-R certification (russia)

12 Established 12 overseas branches (first round)

2007

02 Listed on KOSDAQ and began trading publicly

06 Selected as No.1 products for the next generation and obtained TGA certification (australia)

2008

01 Established osstem bone science research center

12 Selected as a managing organization for the national strategic technology development project

2009

10 Obtained approval for medical device manufacturing and sale from the ministry of health, labor and welfare, japan

2010

03 Launched TSIII SA line

06 Launched TSIII HA line

2011

06 Osstem Implant R&D center was selected as ATC (advanced technology center)

07 Selected as 'World Champ' business

12 Launched 'K2 unit chair', which was selected as a 'World Class Product'

2012

06 Launched TSIII CA line

07 Established dental equi research in

2013

01 Launched xenograft m

09 Launched '

10 Selected as Champion'

OSSTEM Implant Design feature

OSSTEM IMPLANT has revolutionized implant dentistry in South Korea. With a focus on aggressive R&D, a commitment to education and a dedication to manufacturing the best products, Osstem Implant's ultimate goal is to become the global leader in implant dentistry.

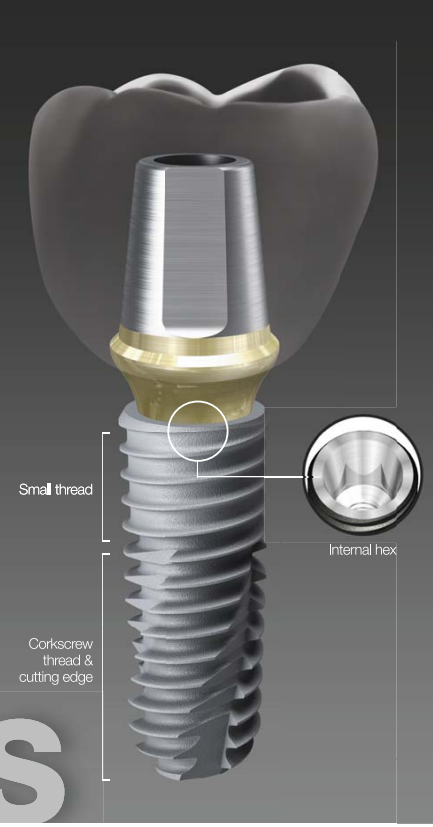

Each implant system has its own unique color code

Submerged type implant with an internal hex and 11°tapered connection

- Internal connection type - Mini / Regular
- Excellent initial stability in soft bone due to smaller threads in the upper section
- Corkscrew thread with cutting edges
  - Strong self-threading effect for easy fixture path
  - Higher initial stability and consistent insertion torque
- Different body types to properly match the patient's bone quality and clinical condition
  - TSII (straight body) : easy to adjust depth
  - TSIII (1.5° tapered body) : excellent initial stability necessary for immediate loading, even in soft bone
  - TSIV (6° tapered body) : specifically designed for the maxillary sinus and soft bone, excellent initial stability
- Available surface types - SA / CA / HA / BA / SOI

Non-submerged type implant with an internal octa and 8°tapered connection

- Internal connection type - Regular / Wide
- Corkscrew thread with cutting edges
  - Strong self-threading effect for easy fixture path
  - Higher initial stability and consistent insertion torque
- Different body types to properly match the patient's bone quality and clinical condition
  - SSII (straight body) : easy to adjust the insertion depth
  - SSIII (1.5° tapered body) : excellent initial stability necessary for immediate loading, even in soft bone
- Available surface types - SA / CA / HA / BA

Submerged type implant with an external hex connection structure

- Internal connection type - Mini / Regular / Wide / Wide PS
- Corkscrew thread with cutting edges
  - Strong self-threading effect for easy fixture path
  - Higher initial stability and consistent insertion torque
- Different body types to properly match the patient's bone quality and clinical condition
  - USII (straight body) : easy to adjust the insertion depth
  - USIII (1.5° tapered body) : excellent initial stability necessary for immediate loading, even in soft bone
  - USIV (6° tapered body) : specifically designed for the maxillary sinus and soft bone, excellent initial stability
- Available surface types - SA / CA

OSSTEM Implant Surface feature

The key factor in providing implant treatment safely and efficiently is surface technology.
OSSTEM IMPLANT is proud of its cutting-edge surface technology.

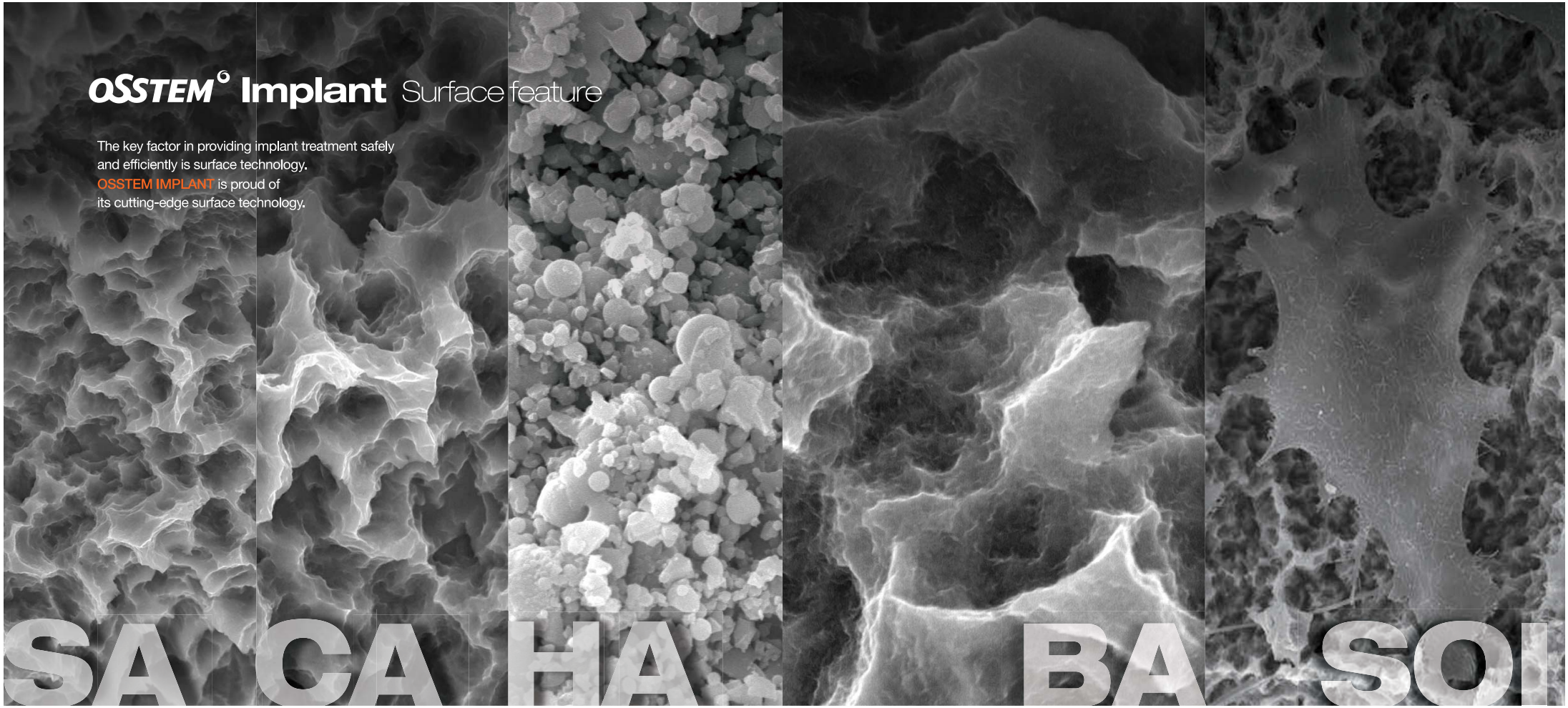

Acid Treated Optimized Surface

- Ra 2.5~3.0㎛ surface roughness (note : the upper 0.5mm part of the implant has Ra 0.5~0.6um)
- Consistent surface micro pits between 1 to 3㎛
- Surface area is increased by 46 percent compared to RBM treated implants

In-vitro & In-vivo Bone Response

- 20% improvement in osteoblast separation and ossification compared to RBM
- Initial bone reaction performance in animal model (mini-pig)
  - 48% improvement in initial stability (RT, 4 weeks) compared to RBM
  - 20% improvement in ossification (BIC, 4 weeks) compared to RBM

Super-hydrophilic SA surface suspended in a calcium solution

- Same SA surface morphology
- Optimizing surface reaction by suspension in a calcium (CaCl2) solution
- Increased new bone formation area due to the excellent blood wettability
- Bone response improved in early osseointegration stage compared to standard SA surface

In-vitro & In-vivo Bone Response

- Protein and cellular adhesion tripled compared to SA surfaces
- Initial cellular differentiation by 19 percent compared to SA surfaces (7 days)
- Initial stability increased by 34 percent compared to SA surfaces (RT at 4 weeks)
- Ossification rate Increased by 26 percent compared to SA surfaces (BIC at 4 weeks)

Premium high-crystalline HA-coated surface

- 30 to 60㎛ thick high-crystalline HA coating
- HA coated onto a RBM surface (Ra 3.0 to 3.5㎛)
- High HA crystalline over 98 percent
- Solved the problem with low-crystalline HA resorption

In-vitro & In-vivo Bone Response

- Excellent biocompatibility in HA that is similar to bone
- Initial ossification by osteoblasts doubled compared to SA surfaces (5 days)
- 40% improvement in initial stability (RT, 4 weeks) in animal models compared to SA
- Suitable for poor bone quality, tooth extraction sites or immediate implant insertion

Premium low crystalline nano-HA coated SA surface

- SA surface (Ra 2.5 to 3.0㎛) coated with HA
- 10nm ultra-thin HA coating
- Dual function between titanium and HA
  - HA is naturally resorbed during ossification

In-vitro & In-vivo Bone Response

- Advantages of both SA and HA surfaces
  - SA's ability to maintain an optimal surface
  - HA's ability to form high quality initial bone, even in a poor bone quality
- 40% improvement in ossification (BIC) compared to SA
- It is applicable to all types of bone quality

Next-generation surface coated with special material (K material)

- Activation of blood clot formation
- Avoid carbon adsorption in air
- Coating of K material on SA surface (Ra 2,0~3.0㎛)
- Superior blood wettability with super hydrophilic surface.

In-vitro & In-vivo Bone Response

- Protain and cellular adhesion 130 times increase compared to SA surface
- Initial stability increased by 57 percent compared to SA surfaces (RT at 4 weeks)
- Surface with the shortest duration of surgery

TS SYSTEM Contents

016 TSII SA Fixture
018 TSIII SA Fixture
020 TSIV SA Fixture
022 Simple Mount
022 Cover Screw
023 Healing Abutment
024 Custom Healing Abutment
027 Rigid Abutment
030 Rigid Protect Cap
030 Rigid Retraction Cap
030 Rigid Impression Coping
031 Rigid Burn-out Cylinder
031 Rigid Lab Analog
032 Transfer Abutment
036 Bite Index
037 Fixture Pick-up Impression Coping
038 Fixture Transfer Impression Coping
039 Laboratory Screw
039 Fixture Lab Analog
041 Angled Abutment
043 FreeForm ST Abutment
045 GoldCast Abutment
046 NP-Cast Abutment
049 OneFit Abutment
049 Scan Boby
050 Pre-Milled Abutment
051 Link Abutment for Public
052 Link Abutment for Cerec
053 Scan Post
053 Scan Body
054 ZioCera Abutment
056 ZioCera Angled Abutment
057 Quick Temporary Abutment
059 Temporary Abutment
061 Multi Abutment
062 Multi Abutment Outer Driver
062 Multi Abutment Machine Driver
062 Multi Abutment NP-Cast Cylinder
063 Multi Combination Cylinder
064 Multi Angled Abutment
067 Convertible Abutment
069 Convertible Combination Cylinder
069 Convertible Angled Cylinder
069 Convertible GoldCast Cylinder
070 Convertible Temporary Cylinder
070 Convertible Plastic Cylinder
071 Convertible Pick-up Impression Coping
071 Convertible Transfer Impression Coping
072 Convertible Protect Cap
072 Convertible Lab Analog
072 Convertible Polishing Protector
075 Stud Abutment
076 O-ring Retainer Cap Set
076 O-ring Retainer Set
076 O-ring Set
076 O-ring Lab Analog
077 Locator® Abutment
078 Locator® Male Processing Kit
078 Locator® Replacement Male
078 Locator® Extended Replacement Male
079 Locator® Black Processing Male
079 Locator® Block Out Spacers
079 Locator® Impression Coping
079 Locator® Lab Analog
080 Locator® Core Tool
080 Locator® Torque Driver
081 Port Angled Abutment
083 Port Angled Abutment Head

OSSTEM IMPLANT

TS SYSTEM

FIXTURE

016 TSII SA Fixture
018 TSIII SA Fixture
020 TSIV SA Fixture
022 Simple Mount
022 Cover Screw
023 Healing Abutment
024 Custom Healing Abutment

COMPONENTS

026 **PROSTHETIC FLOW DIAGRAM 1**
027 Rigid Abutment
032 Transfer Abutment
040 **PROSTHETIC FLOW DIAGRAM 2**
041 Angled / FreeForm ST Abutment
045 GoldCast / NP-Cast Abutment
048 **PROSTHETIC FLOW DIAGRAM 3**
049 OneFit Abutment
050 Pre-Milled Abutment
051 Link Abutment (for Public / Cerec)
054 Ziocera (Angled) Abutment
057 Temporary Abutment (Quick)
060 **PROSTHETIC FLOW DIAGRAM 4**
061 Multi (Angled) Abutment
066 **PROSTHETIC FLOW DIAGRAM 5**
067 Convertible Abutment
074 **PROSTHETIC FLOW DIAGRAM 6**
075 Stud / Locator® Abutment
081 Port Angled Abutment

TSII SA Fixture

- Submerged type implant with an internal hex and 11° tapered connection
- Optimized screw thread design with the ideal SA surface
- Straight body design allows easy insertion depth adjustments
- Excellent initial stability in soft bone due to small threads in the upper section
- Corkscrew threading with excellent self-threading effect
- Recommended insertion torque : ≤40 Ncm

※ Fixtures with a diameter of 4.5mm or more are recommended for the posterior area

NoMount fixture order code
: fixture product code (ex : TS2S4010S)

Pre-Mounted fixture (fixture + mount + cover screw) order code
: **B** + fixture product code (ex : **B**TS2S4010S)

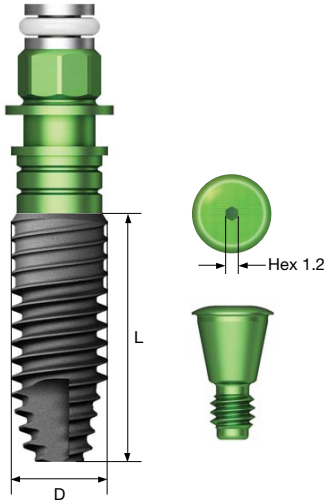

D ø3.5
Hex 2.1

M

L	8.5	10	11.5	13
	TS2M**3508S**	TS2M**3510S**	TS2M**3511S**	TS2M**3513S**

D ø4.0
Hex 2.5

R

L	7	8.5	10	11.5	13
	TS2S**4007S**	TS2S**4008S**	TS2S**4010S**	TS2S**4011S**	TS2S**4013S**

D ø4.5
Hex 2.5

R

L	7	8.5	10	11.5	13
	TS2S**4507S**	TS2S**4508S**	TS2S**4510S**	TS2S**4511S**	TS2S**4513S**

D ø5.0
Hex 2.5

R

L	6	7	8.5	10	11.5	13
	Short					
	TS2S**5006S**	TS2S**5007S**	TS2S**5008S**	TS2S**5010S**	TS2S**5011S**	TS2S**5013S**

Nominal and actual diameters may slightly differ
Caution For a short implant, a sufficient healing period is strongly recommended. A short implant should be splinted with another implant when considering prosthetic options.

TSIII SA Fixture

- A submerged type implant with internal hex and taper connection of 11°
- Optimal screw thread design for optimal SA surface implementation
- Taper body design with excellent initial fixation
- Highest initial stability in soft bone by using upper-part small thread
- Powerful self-threading effect with corkscrew thread
- Acquired initial fixation force for immediate loading in soft bone

Narrow

- Used in narrow ridge
- Compatible with mini abutment (except cover screw, mount, lab analog)

Ultra-wide

- Useful for posterior extraction and immediate implant placement case, and for replacement of failed implant case
- Optimized apex design ensures stable initial fixation force even at the extraction and bottom 3mm
- Recommended implant placement torque : below 40Ncm

※ In posterior single case, recommended at least ø 4.5mm fixture

NoMount fixture order code
: fixture product code (ex : TS3S4010S)

Pre-Mounted fixture (fixture + mount + cover screw) order code
: B + fixture product code (ex : BTS3S4010S)

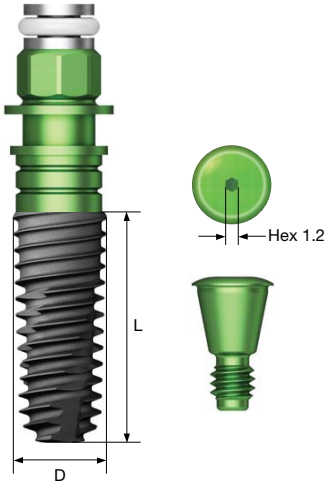

D ø3.0 Hex 2.1 Narrow

M

L	8.5	10	11.5	13
	TS3M3008S	TS3M3010S	TS3M3011S	TS3M3013S

D ø3.5 Hex 2.1

M

L	8.5	10	11.5	13
	TS3M3508S	TS3M3510S	TS3M3511S	TS3M3513S

D ø4.0 Hex 2.5

R

L	7	7	8.5	10	11.5	13
	Extra short					
	TS3S4006S	TS3S4007S	TS3S4008S	TS3S4010S	TS3S4011S	TS3S4013S

D ø4.5 Hex 2.5

R

L	7	7	8.5	10	11.5	13
	Extra short					
	TS3S4506S	TS3S4507S	TS3S4508S	TS3S4510S	TS3S4511S	TS3S4513S

D ø5.0 Hex 2.5

R

L	6	6	6	7	8.5	10	11.5	13
	Extra short	Extra short	Short					
	TS3S5004S	TS3S5005S	TS3S5006S	TS3S5007S	TS3S5008S	TS3S5010S	TS3S5011S	TS3S5013S

D ø5.5 Hex 2.5

R

L	6	7	8.5	10	11.5	13
	Short					
	TS3S5506S	TS3S5507S	TS3S5508S	TS3S5510S	TS3S5511S	TS3S5513S

Ultra-Wide

D ø6.0 Hex 2.5

R

L	6	7	8.5	10	11.5	13
	Short					
	TS3S6006S	TS3S6007S	TS3S6008S	TS3S6010S	TS3S6011S	TS3S6013S

D ø7.0 Hex 2.5

R

L	6	7	8.5	10	11.5	13
	Short					
	TS3S7006S	TS3S7007S	TS3S7008S	TS3S7010S	TS3S7011S	TS3S7013S

Nominal and actual diameters may slightly differ
Caution For a short implant, a sufficient healing period is strongly recommended. A short implant should be splinted with another implant when considering prosthetic options.

TSIV SA Fixture

- A submerged type implant with internal hex and taper connection of 11°
- Optimal screw thread design for optimal SA surface implementation
- Fixture for maxillary sinus and soft bone
- The effect of improving the initial fixation force in soft bone by applying the upper part small thread
- Powerful self-threading effect with corkscrew thread
- With a sharp apex design, it can be placed after D4 bone 2.0/3.0mm drilling

Ultra-wide

- Useful for posterior extraction and immediate implant placement case, and for replacement of failed Implant case
- Optimized apex design ensures stable initial fixation force even at the extraction and bottom 3mm
- Recommended implant placement torque : below 40Ncm

※ In posterior single case, fixture with diameter of 4.5mm or more is recommended

※ TSIV fixture is recommended to be lowered to 15rpm or less because the pitch of the thread is large and the implant placement speed is fast

NoMount fixture order code
: fixture product code (ex : TS4S4010S)

Pre-Mounted fixture (fixture + mount + cover screw) order code
: **B** + fixture product code (ex : **B**TS4S4010S)

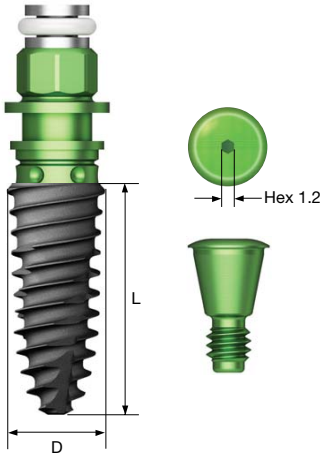

D ø4.0 Pitch 0.8
Hex 2.5

R

L	7	8.5	10	11.5	13
	TS4S**4007S**	TS4S**4008S**	TS4S**4010S**	TS4S**4011S**	TS4S**4013S**

D ø4.5 Pitch 1.0
Hex 2.5

R

L	7	8.5	10	11.5	13
	TS4S**4507S**	TS4S**4508S**	TS4S**4510S**	TS4S**4511S**	TS4S**4513S**

D ø5.0 Pitch 1.2
Hex 2.5

R

L	7	8.5	10	11.5	13
	TS4S**5007S**	TS4S**5008S**	TS4S**5010S**	TS4S**5011S**	TS4S**5013S**

Ultra-wide

D ø6.0
Hex 2.5

R

L	7	8.5	10	11.5	13
	TS4S**6007S**	TS4S**6008S**	TS4S**6010S**	TS4S**6011S**	TS4S**6013S**

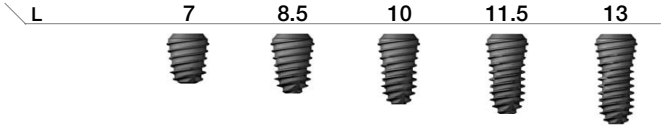

D ø7.0
Hex 2.5

R

L	7	8.5	10	11.5	13
	TS4S**7007S**	TS4S**7008S**	TS4S**7010S**	TS4S**7011S**	TS4S**7013S**

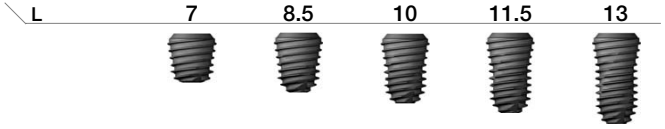

Nominal and actual diameters may slightly differ

Mount & Screw

Simple Mount

- Use a 1.2 hex driver
- Recommended tightening torque : 8~10Ncm
- Packing unit : mount + mount screw

※ Disposable; re-use is not allowed

- C = Connection

M Mini

R Regular

C

M For ø3.0

TSSM30

M

TSSAMM

R

TSSAMR

Cover Screw

- Depending on the depth of the fixture, height(H) is selected
- ø3.0 fixture uses exclusive cover screw
- By hand force with 1.2 hex driver
- P = Platform

M Mini

R Regular

P \ H	0.4	1.4	2.0
M For ø3.0	GSCS30	GSCS30M	GSCS30L
M	GSCS35	GSCS35M	GSCS35L
R	GSCS40S-G	GSCS40M-G	GSCS40L-G

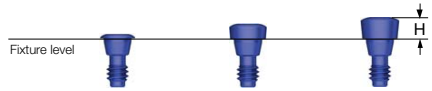

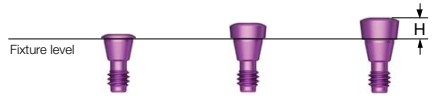

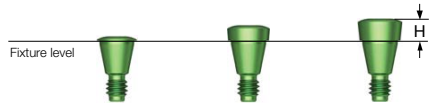

Healing Abutment

- Yellow(mini) color coded prosthetic parts are for ø3.5/3.0 fixtures
- Use a 1.2 hex driver (torque manually)

M Mini

R Regular

Matching table

Healing abutment	H	3.0	4.0	5.0	7.0
Abutment	G/H	1.0	2.0 or 3.0	3.0 or 4.0	5.0 and above
Impression coping	Type	Short	Short	Long	Long

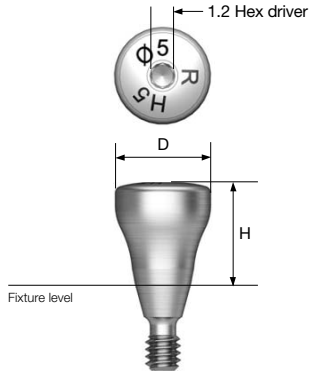

D \ H	3.0	4.0	5.0	7.0	9.0
ø4.0	TSHA403M	TSHA404M	TSHA405M	TSHA407M	TSHA409M
ø4.5	TSHA453M	TSHA454M	TSHA455M	TSHA457M	TSHA459M

D \ H	3.0	4.0	5.0	7.0	9.0
ø4.0	TSHA403R	TSHA404R	TSHA405R	TSHA407R	TSHA409R
ø4.5	TSHA453R	TSHA454R	TSHA455R	TSHA457R	TSHA459R
ø5.0	TSHA503R	TSHA504R	TSHA505R	TSHA507R	TSHA509R
ø6.0	TSHA603R	TSHA604R	TSHA605R	TSHA607R	TSHA609R
ø7.0	TSHA703R	TSHA704R	TSHA705R	TSHA707R	TSHA709R
ø8.0	-	-	TSHA805R	-	-

Custom Healing Abutment

- Healing abutment shaped like a tooth
- Prep able and resin friendly
- Material : medical grade PEEK
- Titanium screw included
- Use a 1.2 hex driver (torque manually)
- Packing unit : abutment + Ti screw
- P = Platform

Abutment + Ti screw order code
: product code + **TH** (ex : TSCHAPR7**TH**)

M Mini

R Regular

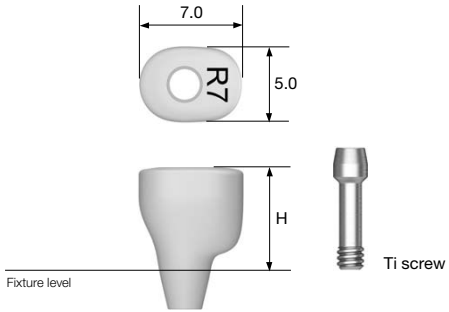

P \ H	5.0	7.0	9.0
M Ti screw : GSCHABSMT	TSCHAP**M5**	TSCHAP**M7**	TSCHAP**M9**
R Ti screw : GSCHABSST	TSCHAP**R5**	TSCHAP**R7**	TSCHAP**R9**

Rigid / Transfer

Abutment Level Impression

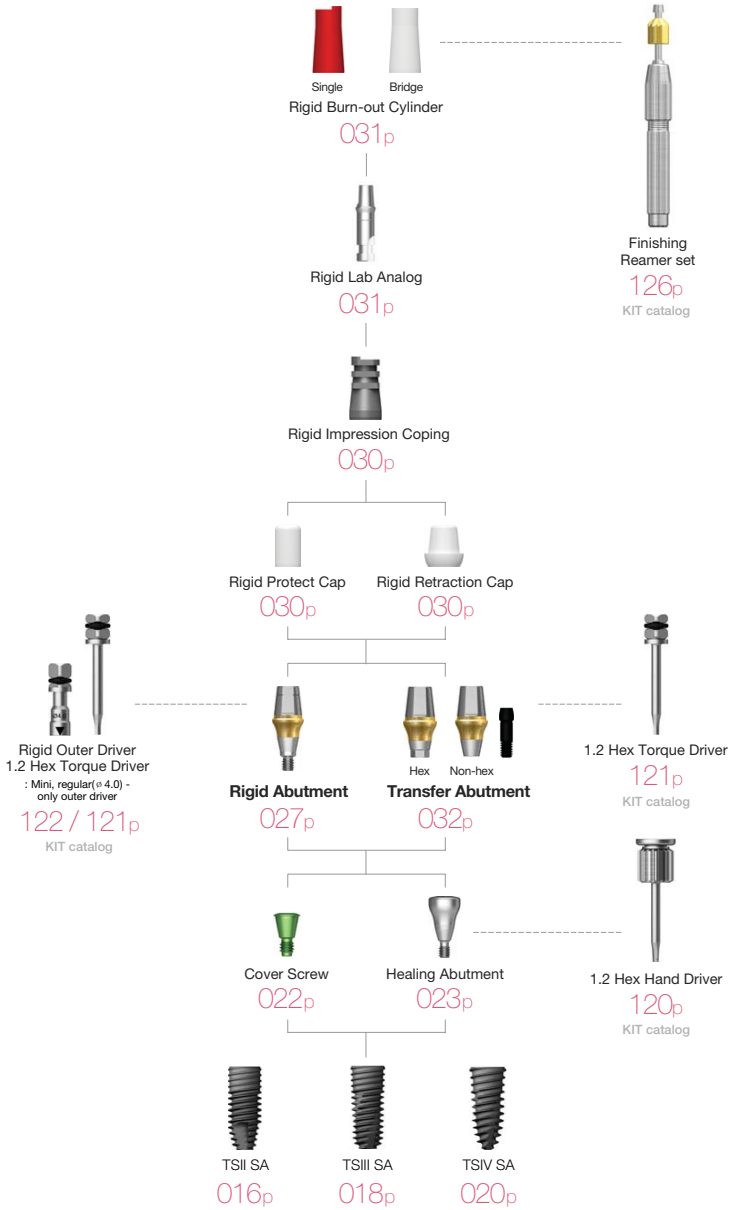

Rigid Abutment

- Cement-retained prosthesis
- Abutment level impression
- ø 4.0 : torque with the outer driver (code : ORDML/ORDMS)
- ø 4.5/5.0/6.0 : torque with the outer driver or 1.2 hex driver
- ø 7.0 : torque with a 1.2 hex driver
- Recommended tightening torque : 30Ncm
- Packing unit : abutment + protect cap

Abutment + protect cap order code
: product code + **P** (ex : GSRA5620**P**)

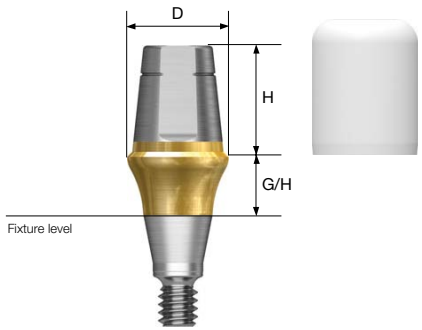

D ø4.0

M

H \ G/H	1.0	2.0	3.0	4.0	5.0
4.0	GSRA**4410**	GSRA**4420**	GSRA**4430**	GSRA**4440**	GSRA**4450**
5.5	GSRA**4610**	GSRA**4620**	GSRA**4630**	GSRA**4640**	GSRA**4650**
7.0	GSRA**4710**	GSRA**4720**	GSRA**4730**	GSRA**4740**	GSRA**4750**

D ø4.5

M

H \ G/H	1.0	2.0	3.0	4.0	5.0
4.0	GSRA**4411**	GSRA**4421**	GSRA**4431**	GSRA**4441**	GSRA**4451**
5.5	GSRA**4611**	GSRA**4621**	GSRA**4631**	GSRA**4641**	GSRA**4651**
7.0	GSRA**4711**	GSRA**4721**	GSRA**4731**	GSRA**4741**	GSRA**4751**

Rigid Abutment

D ø4.0

R

H \ G/H	1.0	2.0	3.0	4.0	5.0
4.0	GSRAS4410	GSRAS4420	GSRAS4430	GSRAS4440	GSRAS4450
5.5	GSRAS4610	GSRAS4620	GSRAS4630	GSRAS4640	GSRAS4650
7.0	GSRAS4710	GSRAS4720	GSRAS4730	GSRAS4740	GSRAS4750

D ø4.5

R

H \ G/H	1.0	2.0	3.0	4.0	5.0
4.0	GSRAS4411	GSRAS4421	GSRAS4431	GSRAS4441	GSRAS4451
5.5	GSRAS4611	GSRAS4621	GSRAS4631	GSRAS4641	GSRAS4651
7.0	GSRAS4711	GSRAS4721	GSRAS4731	GSRAS4741	GSRAS4751

D ø5.0

R

H \ G/H	1.0	2.0	3.0	4.0	5.0
4.0	GSRA5410	GSRA5420	GSRA5430	GSRA5440	GSRA5450
5.5	GSRA5610	GSRA5620	GSRA5630	GSRA5640	GSRA5650
7.0	GSRA5710	GSRA5720	GSRA5730	GSRA5740	GSRA5750

D ø6.0

R

H \ G/H	1.0	2.0	3.0	4.0	5.0
4.0	GSRA6410	GSRA6420	GSRA6430	GSRA6440	GSRA6450
5.5	GSRA6610	GSRA6620	GSRA6630	GSRA6640	GSRA6650
7.0	GSRA6710	GSRA6720	GSRA6730	GSRA6740	GSRA6750

D ø7.0

R

H \ G/H	1.0	2.0	3.0	4.0	5.0
5.5	GSRA7610	GSRA7620	GSRA7630	GSRA7640	GSRA7650

Rigid Abutment Components

Rigid Protect Cap

- Protects the rigid abutment and minimizes patient irritation
- Can be used as the base for a provisional crown
- Available for transfer abutment (except for the ø 4.0)

M Mini
R Regular

D \ H	4.0	5.5	7.0
ø 4.0 / ø 4.0	GSRPC440	GSRPC460	GSRPC470
ø 4.5 / ø 4.5	GSRPC441	GSRPC461	GSRPC471
ø 5.0	GSRPC540	GSRPC560	GSRPC570
ø 6.0	GSRPC640	GSRPC660	GSRPC670
ø 7.0	-	GSRPC760	-

Rigid Burn-out Cylinder

- Replacement of resin cap before wax up using rigid abutment
- Used after casting, clean the margin for proper fitting

M Mini
R Regular

D \ Type	Single	Bridge
ø 4.0 / ø 4.0	GSRP400S	GSRP400B
ø 4.5 / ø 4.5	GSRP450S	GSRP450B
ø 5.0	GSRP500S	GSRP500B
ø 6.0	GSRP600S	GSRP600B
ø 7.0	GSRP700S	GSRP700B

Rigid Retraction Cap

- Used for accurate margin reproduction when taking a direct impression
- Can be used as the base for a provisional crown
- Available for transfer abutment (except for the ø 4.0)

M Mini
R Regular

D \ H	4.0	5.5	7.0
ø 4.0 / ø 4.0	GSRRC440	GSRRC460	GSRRC470
ø 4.5 / ø 4.5	GSRRC441	GSRRC461	GSRRC471
ø 5.0	GSRRC540	GSRRC560	GSRRC570
ø 6.0	GSRRC640	GSRRC660	GSRRC670
ø 7.0	-	GSRRC760	-

Rigid Lab Analog

- Rigid abutment reproduction on model after impression
- Connect to the appropriate color coded rigid impression coping

M Mini
R Regular

D \ H	4.0	5.5	7.0
ø 4.0 / ø 4.0	GSRLA440	GSRLA460	GSRLA470
ø 4.5 / ø 4.5	GSRLA441	GSRLA461	GSRLA471
ø 5.0	GSRLA540	GSRLA560	GSRLA570
ø 6.0	GSRLA640	GSRLA660	GSRLA670
ø 7.0	-	GSRLA760	-

Rigid Impression Coping

- Impression components for rigid abutment
- Color coded by abutment height
- Available for transfer abutment (except for the ø 4.0)

M Mini
R Regular

D \ H	4.0	5.5	7.0
ø 4.0 / ø 4.0	GSRIC440S	GSRIC460S	GSRIC470S
ø 4.5 / ø 4.5	GSRIC441S	GSRIC461S	GSRIC471S
ø 5.0	GSRIC540S	GSRIC560S	GSRIC570S
ø 6.0	GSRIC640S	GSRIC660S	GSRIC670S
ø 7.0	-	GSRIC760S	-

Transfer Abutment

- Cement/combination-retained prosthesis
- Fixture level impression
- Abutment level impression is available using the rigid impression coping (except the ø 4.0)
- Use a 1.2 hex driver
- Recommended tightening torque : 20Ncm(mini), 30Ncm(regular)
- Packing unit : abutment + EbonyGold screw

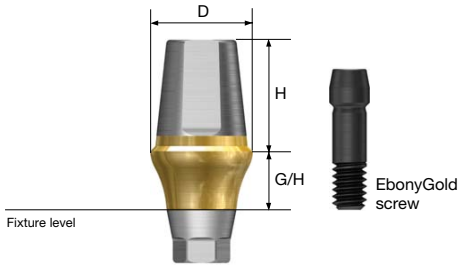

Abutment + EbonyGold screw order code
: product code + **WH** (ex : GSTA4621**WH**)

D ø4.0

M

EbonyGold screw
: GSABSM

Abutment level impression not possible

	H \ G/H	1.0	2.0	3.0	4.0
Hex	5.5	GSTA4612	GSTA4622	GSTA4632	GSTA4642
	7.0	GSTA4712	GSTA4722	GSTA4732	GSTA4742
Non-Hex	5.5	GSTA4612N	GSTA4622N	GSTA4632N	GSTA4642N
	7.0	GSTA4712N	GSTA4722N	GSTA4732N	GSTA4742N

	H \ G/H	5.0	6.0	7.0
Hex	5.5	GSTA4652	GSTA4662	GSTA4672
	7.0	GSTA4752	GSTA4762	GSTA4772
Non-Hex	5.5	GSTA4652N	GSTA4662N	GSTA4672N
	7.0	GSTA4752N	GSTA4762N	GSTA4772N

D ø4.5

M

EbonyGold screw
: GSABSM

	H \ G/H	1.0	2.0	3.0	4.0
Hex	5.5	GSTA4611	GSTA4621	GSTA4631	GSTA4641
	7.0	GSTA4711	GSTA4721	GSTA4731	GSTA4741
Non-Hex	5.5	GSTA4611N	GSTA4621N	GSTA4631N	GSTA4641N
	7.0	GSTA4711N	GSTA4721N	GSTA4731N	GSTA4741N

	H \ G/H	5.0	6.0	7.0
Hex	5.5	GSTA4651	GSTA4661	GSTA4671
	7.0	GSTA4751	GSTA4761	GSTA4771
Non-Hex	5.5	GSTA4651N	GSTA4661N	GSTA4671N
	7.0	GSTA4751N	GSTA4761N	GSTA4771N

D ø4.5

R

EbonyGold screw
: GSABSS

	H \ G/H	1.0	2.0	3.0	4.0
Hex	5.5	GSTAS4611	GSTAS4621	GSTAS4631	GSTAS4641
	7.0	GSTAS4711	GSTAS4721	GSTAS4731	GSTAS4741
Non-Hex	5.5	GSTAS4611N	GSTAS4621N	GSTAS4631N	GSTAS4641N
	7.0	GSTAS4711N	GSTAS4721N	GSTAS4731N	GSTAS4741N

	H \ G/H	5.0	6.0	7.0
Hex	5.5	GSTAS4651	GSTAS4661	GSTAS4671
	7.0	GSTAS4751	GSTAS4761	GSTAS4771
Non-Hex	5.5	GSTAS4651N	GSTAS4661N	GSTAS4671N
	7.0	GSTAS4751N	GSTAS4761N	GSTAS4771N

Transfer Abutment

D ø5.0

R

EbonyGold screw
: GSABSS

	H \ G/H	1.0	2.0	3.0	4.0
Hex	4.0	GSTA5410	GSTA5420	GSTA5430	GSTA5440
	5.5	GSTA5610	GSTA5620	GSTA5630	GSTA5640
	7.0	GSTA5710	GSTA5720	GSTA5730	GSTA5740
Non-Hex	4.0	GSTA5410N	GSTA5420N	GSTA5430N	GSTA5440N
	5.5	GSTA5610N	GSTA5620N	GSTA5630N	GSTA5640N
	7.0	GSTA5710N	GSTA5720N	GSTA5730N	GSTA5740N

	H \ G/H	5.0	6.0	7.0
Hex	4.0	GSTA5450	GSTA5460	GSTA5470
	5.5	GSTA5650	GSTA5660	GSTA5670
	7.0	GSTA5750	GSTA5760	GSTA5770
Non-Hex	4.0	GSTA5450N	GSTA5460N	GSTA5470N
	5.5	GSTA5650N	GSTA5660N	GSTA5670N
	7.0	GSTA5750N	GSTA5760N	GSTA5770N

D ø6.0

R

EbonyGold screw
: GSABSS

	H \ G/H	1.0	2.0	3.0	4.0
Hex	4.0	GSTA6410	GSTA6420	GSTA6430	GSTA6440
	5.5	GSTA6610	GSTA6620	GSTA6630	GSTA6640
	7.0	GSTA6710	GSTA6720	GSTA6730	GSTA6740
Non-Hex	4.0	GSTA6410N	GSTA6420N	GSTA6430N	GSTA6440N
	5.5	GSTA6610N	GSTA6620N	GSTA6630N	GSTA6640N
	7.0	GSTA6710N	GSTA6720N	GSTA6730N	GSTA6740N

D ø6.0

R

EbonyGold screw
: GSABSS

	H \ G/H	5.0	6.0	7.0
Hex	4.0	GSTA6450	GSTA6460	GSTA6470
	5.5	GSTA6650	GSTA6660	GSTA6670
	7.0	GSTA6750	GSTA6760	GSTA6770
Non-Hex	4.0	GSTA6450N	GSTA6460N	GSTA6470N
	5.5	GSTA6650N	GSTA6660N	GSTA6670N
	7.0	GSTA6750N	GSTA6760N	GSTA6770N

D ø7.0

R

EbonyGold screw
: GSABSS

	H \ G/H	1.0	2.0	3.0	4.0
Hex	4.0	GSTA7410	GSTA7420	GSTA7430	GSTA7440
	5.5	GSTA7610	GSTA7620	GSTA7630	GSTA7640
Non-Hex	4.0	GSTA7410N	GSTA7420N	GSTA7430N	GSTA7440N
	5.5	GSTA7610N	GSTA7620N	GSTA7630N	GSTA7640N

	H \ G/H	5.0	6.0	7.0
Hex	4.0	GSTA7450	GSTA7460	GSTA7470
	5.5	GSTA7650	GSTA7660	GSTA7670
Non-Hex	4.0	GSTA7450N	GSTA7460N	GSTA7470N
	5.5	GSTA7650N	GSTA7660N	GSTA7670N

Transfer Abutment Components

Bite Index

- Used for 'check bite impression' with fixture
- Use a 1.2 hex driver (torque manually)
- Packing unit : 2ea

M Mini

R Regular

D \ L	4.0	6.0	8.0	10.0	12.0
Ø 4.5	GSBIM**4504S**	GSBIM**4506S**	GSBIM**4508S**	GSBIM**4510S**	GSBIM**4512S**
Ø 5.5	GSBIS**5504S**	GSBIS**5506S**	GSBIS**5508S**	GSBIS**5510S**	GSBIS**5512S**

Fixture Pick-up Impression Coping

- Fixture level components for impression
- For open tray impressions
- Unique design that is fixed position in the impression material
- Use a 1.2 hex driver (torque manually)
- Packing unit : impression coping body + guide pin(*)

M Mini (Yellow)

R Regular (Green)

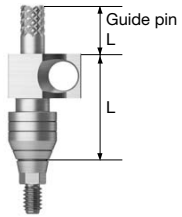

D \ L	11		Guide Pin		
Type	Hex	Non-Hex	0	5.0	9.0
Ø 4.0	GSPIM**4011**	GSPIM**4011N**	GSPGPM**100**	GSPGPM**150***	GSPGPM**150L**
Ø 4.5	GSPIM**4511**	GSPIM**4511N**			
Ø 4.0	GSPIS**4011**	GSPIS**4011N**	GSPGPR**100**	GSPGPR**150***	GSPGPR**150L**
Ø 4.5	GSPIS**4511**	GSPIS**4511N**			
Ø 5.0	GSPIS**5011**	GSPIS**5011N**			
Ø 6.0	GSPIS**6011**	GSPIS**6011N**			
Ø 7.0	GSPIS**7011**	GSPIS**7011N**			

D \ L	15		Guide Pin		
Type	Hex	Non-Hex	0	5.0	9.0
Ø 4.0	GSPIM**4015**	GSPIM**4015N**	GSPGPM**100L**	GSPGPM**150L***	GSPGPM**200L**
Ø 4.5	GSPIM**4515**	GSPIM**4515N**			
Ø 4.0	GSPIS**4015**	GSPIS**4015N**	GSPGPR**100L**	GSPGPR**150L***	GSPGPR**200L**
Ø 4.5	GSPIS**4515**	GSPIS**4515N**			
Ø 5.0	GSPIS**5015**	GSPIS**5015N**			
Ø 6.0	GSPIS**6015**	GSPIS**6015N**			
Ø 7.0	GSPIS**7015**	GSPIS**7015N**			

Transfer Abutment Components

Fixture Transfer Impression Coping

- Fixture level components for impression
- For closed tray impressions
- Triangular arc ensures accurate placement
- Use a 1.2 hex driver (torque manually)
- Packing unit
  - Hex : impression coping body + guide pin
  - Non-hex : impression coping

M Mini (Yellow)

R Regular (Green)

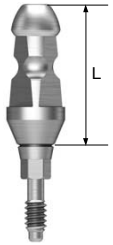

D \ L	11		14	
Type	Hex	Non-Hex	Hex	Non-Hex
Ø 4.0	GSTIM**4011**	GSTIM**4011N**	GSTIM**4014**	GSTIM**4014N**
Ø 4.5	GSTIM**4511**	GSTIM**4511N**	GSTIM**4514**	GSTIM**4514N**
Ø 4.0	GSTIS**4011**	GSTIS**4011N**	GSTIS**4014**	GSTIS**4014N**
Ø 4.5	GSTIS**4511**	GSTIS**4511N**	GSTIS**4514**	GSTIS**4514N**
Ø 5.0	GSTIS**5011**	GSTIS**5011N**	GSTIS**5014**	GSTIS**5014N**
Ø 6.0	GSTIS**6011**	GSTIS**6011N**	GSTIS**6014**	GSTIS**6014N**
Ø 7.0	GSTIS**7011**	GSTIS**7011N**	GSTIS**7014**	GSTIS**7014N**

Laboratory Screw

- Lab screw : abutment screw for lab work
- Waxing screw : longer screw for making screw-type prostheses and transfer jigs
- Packing unit : lab screw, waxing screw

M Mini

R Regular

	Lab Screw	Waxing Screw
M	GSABS**ML**	GSABS**MW**
R	GSABS**SL**	GSABS**SW**

Fixture Lab Analog

- Lab analog for fixture level impressions
- Select appropriate size according to the diameter of a fixture; ø 3.0 / ø 3.5 / ≥ ø 4.0

M Mini

R Regular

M For ø3.0

GSTLA**300**

M

GSTLA**350**

R

GSTLA**400**

PROSTHETIC FLOW DIAGRAM 2

Transfer / Angled / FreeForm ST / GoldCast / NP-Cast

Fixture Level Impression

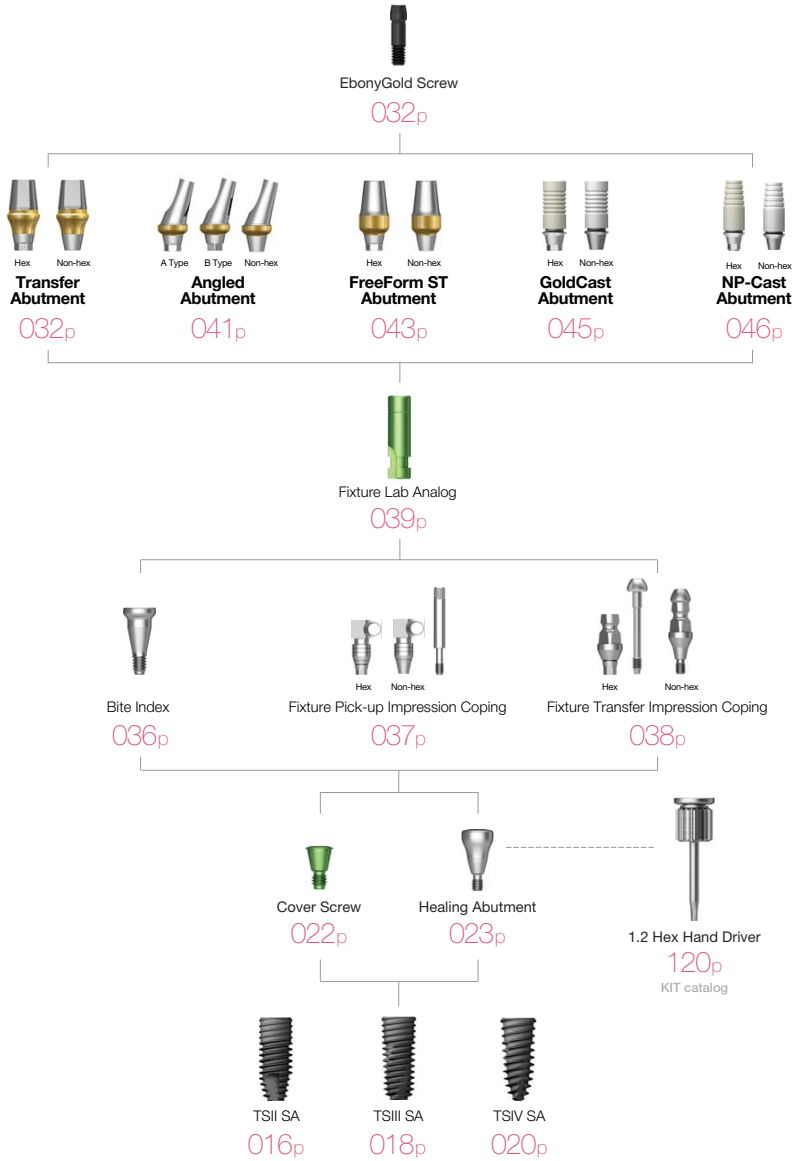

Angled Abutment

- Cement/combination-retained prosthesis
- Angle compensation up to 23° without the need for trimming
- Fixture level impression
- Use a 1.2 hex driver
- Recommended tightening torque : 20Ncm(mini), 30Ncm(regular)
- Packing unit : abutment + EbonyGold screw

Abutment + EbonyGold screw order Code
: product code + **WH** (ex : GSAA5020A**WH**)

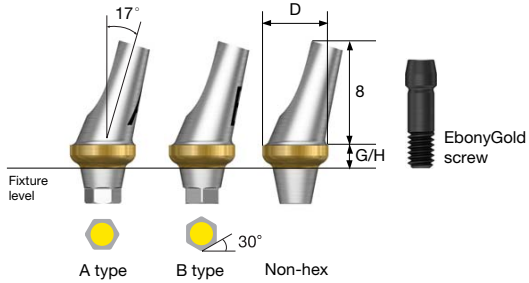

D ø4.0

M

EbonyGold screw
: GSABSM

G/H	2.0			4.0		
Type	Hex A	Hex B	Non-Hex	Hex A	Hex B	Non-Hex
	GSAA**4020MA**	GSAA**4020MB**	GSAA**4020MN**	GSAA**4040MA**	GSAA**4040MB**	GSAA**4040MN**

D ø4.5

M

EbonyGold screw
: GSABSM

G/H	2.0			4.0		
Type	Hex A	Hex B	Non-Hex	Hex A	Hex B	Non-Hex
	GSAA**4520MA**	GSAA**4520MB**	GSAA**4520MN**	GSAA**4540MA**	GSAA**4540MB**	GSAA**4540MN**

Angled Abutment

D ø4.5

R

EbonyGold screw
: GSABSS

G/H	2.0			4.0		
Type	Hex A	Hex B	Non-Hex	Hex A	Hex B	Non-Hex
	GSAA4520A	GSAA4520B	GSAA4520N	GSAA4540A	GSAA4540B	GSAA4540N

D ø5.0

R

EbonyGold screw
: GSABSS

G/H	2.0			4.0		
Type	Hex A	Hex B	Non-Hex	Hex A	Hex B	Non-Hex
	GSAA5020A	GSAA5020B	GSAA5020N	GSAA5040A	GSAA5040B	GSAA5040N

D ø6.0

R

EbonyGold screw
: GSABSS

G/H	2.0			4.0		
Type	Hex A	Hex B	Non-Hex	Hex A	Hex B	Non-Hex
	GSAA6020A	GSAA6020B	GSAA6020N	GSAA6040A	GSAA6040B	GSAA6040N

FreeForm ST Abutment

- Cement/combination-retained prosthesis
- Prep-able margins can be contoured as needed
- Fixture level impression
- Use a 1.2 hex driver
- Recommended tightening torque : 20Ncm(mini), 30Ncm(regular)
- Packing unit : abutment + EbonyGold screw

Abutment + EbonyGold screw order code
: pcode + **WH** (ex : GSFA5015**WH**)

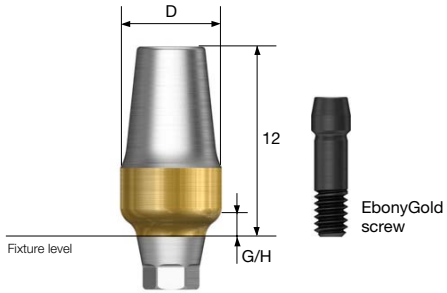

D ø4.0

M

EbonyGold screw
: GSABSM

G/H	1.5		3.0	
Type	Hex	Non-Hex	Hex	Non-Hex
	GSFAM4015	GSFAM4015N	GSFAM4030	GSFAM4030N

D ø4.0

R

EbonyGold screw
: GSABSS

G/H	1.5		3.0	
Type	Hex	Non-Hex	Hex	Non-Hex
	GSFA4015	GSFA4015N	GSFA4030	GSFA4030N

FreeForm ST Abutment

D ø5.0

R

EbonyGold screw
: GSABSS

G/H	1.5		3.0	
Type	Hex	Non-Hex	Hex	Non-Hex
	GSFAS**5015**	GSFAS**5015N**	GSFAS**5030**	GSFAS**5030N**

D ø5.0

R

EbonyGold screw
: GSABSS

G/H	1.5		3.0	
Type	Hex	Non-Hex	Hex	Non-Hex
	GSFA**5015**	GSFA**5015N**	GSFA**5030**	GSFA**5030N**

D ø6.0

R

EbonyGold screw
: GSABSS

G/H	1.5		3.0	
Type	Hex	Non-Hex	Hex	Non-Hex
	GSFA**6015**	GSFA**6015N**	GSFA**6030**	GSFA**6030N**

D ø7.0

R

EbonyGold screw
: GSABSS

G/H	1.5		3.0	
Type	Hex	Non-Hex	Hex	Non-Hex
	GSFA**7015**	GSFA**7015N**	GSFA**7030**	GSFA**7030N**

GoldCast Abutment

- Cement/combination/screw-retained prosthesis
- Customized prosthesis cast with gold alloy
- Abutment melting point : 1400~1450˚C
- Fixture level impression
- Use a 1.2 hex driver
- Recommended tightening torque : 20Ncm(mini), 30Ncm(regular)
- Packing unit : abutment + EbonyGold screw

Abutment + EbonyGold screw order code
: product code + **WH** (ex : GSGA4510S**WH**)

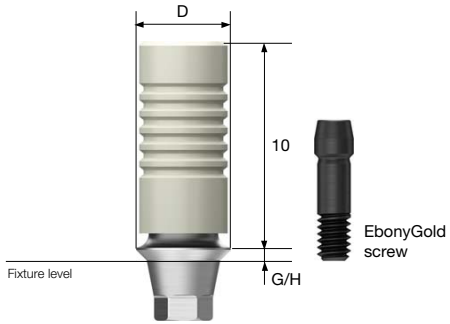

D ø4.0

M

EbonyGold screw
: GSABSM

G/H	1.0		3.0	
Type	Hex	Non-Hex	Hex	Non-Hex
	GSGA**4010S**	GSGA**4010B**	GSGA**4030S**	GSGA**4030B**

D ø4.5

R

EbonyGold screw
: GSABSS

G/H	1.0		3.0	
Type	Hex	Non-Hex	Hex	Non-Hex
	GSGA**4510S**	GSGA**4510B**	GSGA**4530S**	GSGA**4530B**

NP-Cast Abutment

- Cement/combination/screw-retained prosthesis
- Customized prosthesis cast with non-precious alloys
- Abutment melting point : 1400~1550˚C
- Fixture level impression
- Use a 1.2 hex driver
- Recommended tightening torque : 20Ncm(mini), 30Ncm(regular)
- Packing unit : abutment + EbonyGold screw

Abutment + EbonyGold screw order code
: product code + **WH** (ex : GSNA4510S**WH**)

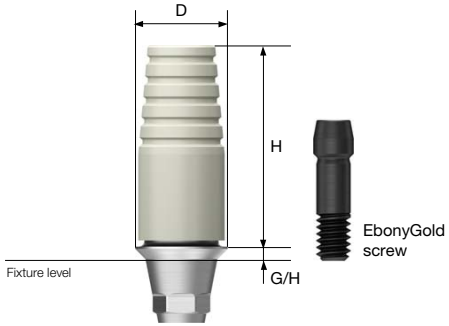

D ø4.0

M

EbonyGold screw
: GSABSM

G/H	1.0		3.0	
Type	Hex	Non-Hex	Hex	Non-Hex
	GSNA**4010S**	GSNA**4010B**	GSNA**4030S**	GSNA**4030B**

D ø4.5

R

EbonyGold screw
: GSABSS

G/H	1.0		3.0	
Type	Hex	Non-Hex	Hex	Non-Hex
	GSNA**4510S**	GSNA**4510B**	GSNA**4530S**	GSNA**4530B**

OSSTEM IMPLANT

PROSTHETIC FLOW DIAGRAM 3

OneFit / Link / ZioCera / ZioCera Angled Temporary / Quick Temporary

Fixture Level Impression

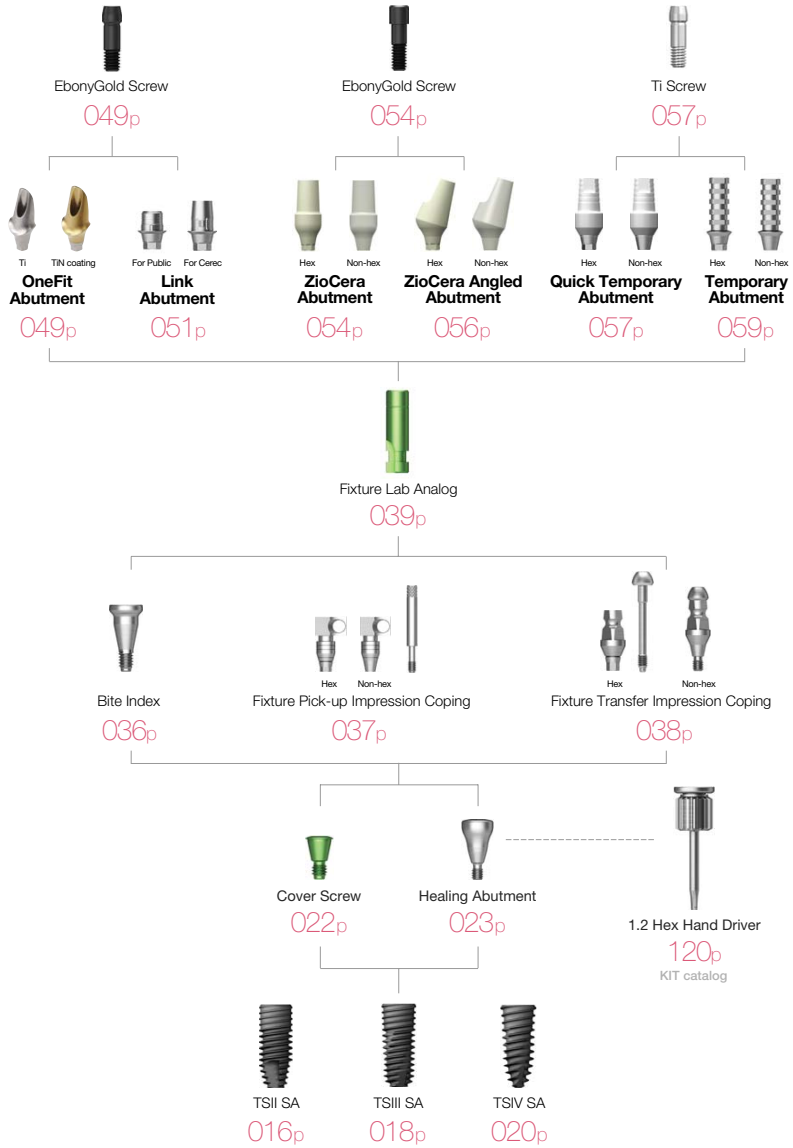

OneFit Abutment

- Cement/combination-retained prosthesis
- CAD/CAM designed and milled customized abutments
- Fixture level impression
- Abutment level impression is possible when using scan healing abutment
- Lead time (in working days)
  - Titanium : 5 days
  - Titanium + gold color : 7 days
- Use a 1.2 hex driver
- Recommended tightening torque : 20Ncm(mini), 30Ncm(regular)
- Packing unit : abutment + EbonyGold screw

Scan Body

- Scan body for titanium custom abutment production
- For model scan : long (15mm)
- For intra oral scan : short (10mm)
- Use a 1.2 hex driver (torque manually)
- Packing unit : scan body + Ti screw

Scan body + screw order code
: product code + **TH** (ex : TSSBM**TH**)

M Mini

R Regular

L	10mm	15mm
M Yellow color screw : TSSBSM	TSSBOM	TSSBM
R Green color screw : TSSBSS	TSSBOS	TSSBS

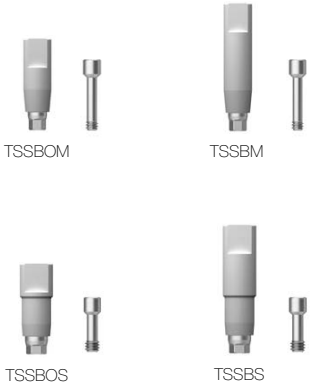

Scan body for other company's implant, OneFit abutment production

D Type	DESBSTH	Purple anodizing screw
Di Type Dt Type M Type	CUSBSTH	

Pre-Milled Abutment

- Making custom abutment with dental milling equipment
- Easy identification of non-genuine product with osstem activation mark
- Superior tightening accuracy compared to non-genuine
- Lineup for various milling equipment
  (milling manufacturers : Doowon, Vatech, Neo, Manix, Zirkonzahn, and Yenadent)
- Packing unit: abutment + Ti screw

Scan body + screw order code
: product code + **WH or TH** (ex : TSPM10ARM**WH**)

Equipment	Implant	D	Specifications		Code
Doowon ARUM Vatech imes-icore	Osstem TS	Ø10	Mini	Hex	TSPM10ARMWH
			Mini	Non-hex	TSPM10ARM**NWH**
			Regular	Hex	TSPM10ARRWH
			Regular	Non-hex	TSPM10ARR**NWH**
	D type	Ø10	Regular	Hex	DEPM10ARRTH
			Regular	Non-hex	DEPM10ARR**NTH**
	N type	Ø10	Regular	Hex	NEPM10ARRTH
			Regular	Non-hex	NEPM10ARR**NTH**
Neo Cameleon	Osstem TS	Ø10	Mini	Hex	TSPM10CAMWH
			Mini	Non-hex	TSPM10CAM**NWH**
			Regular	Hex	TSPM10CARWH
			Regular	Non-hex	TSPM10CAR**NWH**
	D type	Ø10	Regular	Hex	DEPM10CARTH
			Regular	Non-hex	DEPM10CAR**NTH**
	N type	Ø10	Regular	Hex	NEPM10CARTH
			Regular	Non-hex	NEPM10CAR**NTH**
Zikozhan	Osstem TS	Ø10	Mini	Hex	TSPM10ZKMWH
			Mini	Non-hex	TSPM10ZKM**NWH**
			Regular	Hex	TSPM10ZKRWH
			Regular	Non-hex	TSPM10ZKR**NWH**
Manix	Osstem TS	Ø10	Mini	Hex	TSPM10MXMWH
			Mini	Non-hex	TSPM10MXM**NWH**
			Regular	Hex	TSPM10MXRWH
			Regular	Non-hex	TSPM10MXR**NWH**

Link Abutment for Public

- Cement/combination/screw-retained prosthesis
- Titanium base for CAD/CAM designed and milled zirconia custom abutment
- Use osstem's official implant library
- Fixture level impression
- Use a 1.2 hex driver
- Recommended tightening torque
  : 20Ncm(mini), 30Ncm(regular)
- Packing unit : abutment + EbonyGold screw + scan body

Abutment + EbonyGold screw + scan body
order code
: product code + **WH** (ex : TSPTB431R**WH**)

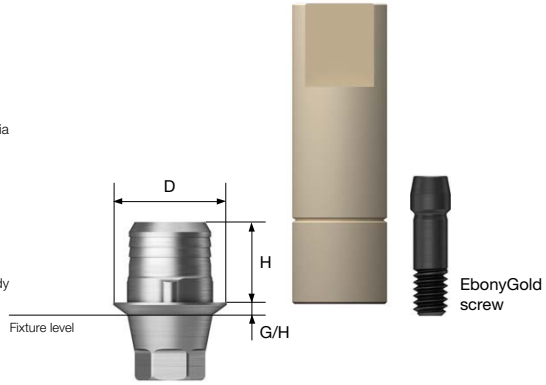

D ø4.0

M

EbonyGold screw
: GSABSM

	G/H / Type	1.0	2.0
Hex	3.0	TSPTB**431M**	TSPTB**432M**
	5.0	TSPTB**451M**	TSPTB**452M**
Non-Hex	3.0	TSPTB**431MN**	TSPTB**432MN**
	5.0	TSPTB**451MN**	TSPTB**452MN**

D ø4.5

R

EbonyGold screw
: GSABSS

	G/H / Type	1.0	2.0
Hex	3.0	TSPTB**431R**	TSPTB**432R**
	5.0	TSPTB**451R**	TSPTB**452R**
Non-Hex	3.0	TSPTB**431RN**	TSPTB**432RN**
	5.0	TSPTB**451RN**	TSPTB**452RN**

Link Abutment for Cerec

- Cement/combination/screw-retained prosthesis
- Titanium base for CEREC™ CAD/CAM designed and milled zirconia custom abutment
- Use a 1.2 hex driver
- Recommended tightening torque
  : 20Ncm(mini), 30Ncm(regular)

Abutment + EbonyGold screw + scan body order code
: product code + **WH** (ex : TSCTBR**WH**)

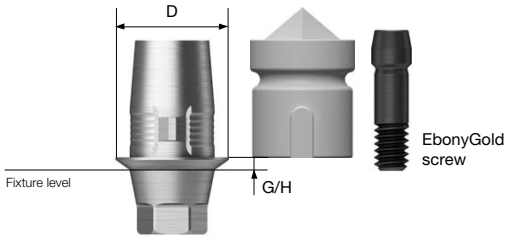

M

EbonyGold screw
: GSABSM

Type	Hex	Non-Hex
	TSCT**BM**	TSCT**BMN**

R

EbonyGold screw
: GSABSS

Type	Hex	Non-Hex
	TSCT**BR**	TSCT**BRN**

Scan Post

- Special post used to scan the position of the implant where space is limited (i.e. thick soft tissue, deeply inserted fixture)
- Connect scan body before scanning
- Use a 1.2 hex driver (toruqe manually)
- Packing unit : scan post + Ti screw

Scan body + Screw order code
: product code + **TH** (ex : TSCSPR**TH**)

M Mini

R Regular

M

Yellow anodizing screw
: GSABSML

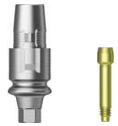

TSCSPM

R

Green anodizing screw
: GSABSSL

TSCSPR

Scan Body

- Scan after connecting to a link abutment for CEREC™, or a scan post
- Packing unit : scan body x 10ea

TSCSBS

ZioCera Abutment

- Cement/combination/screw-retained prosthesis
- Zirconium abutment for an all ceramic prostheses ideal for anterior - esthetic zone
- Fixture level impression
- Use a 1.2 hex driver
- Abutment screw included
- Recommended tightening torque : 20Ncm(mini), 30Ncm(regular)
- Packing unit : abutment + EbonyGold screw

Abutment + EbonyGold screw order code
: product code + **WH** (ex : GSZAS5535N**WH**)

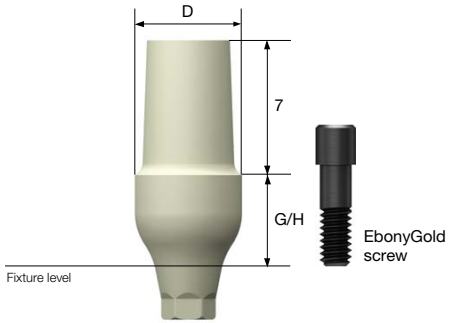

D ø4.5

M

EbonyGold screw
: GSASM

G/H	3.5		5.0	
Type	Hex	Non-Hex	Hex	Non-Hex
	GSZAM**4535**	GSZAM**4535N**	GSZAM**4550**	GSZAM**4550N**

D ø4.5

R

EbonyGold screw
: GSASR

G/H	3.5		5.0	
Type	Hex	Non-Hex	Hex	Non-Hex
	GSZAS**4535**	GSZAS**4535N**	GSZAS**4550**	GSZAS**4550N**

D ø5.5

R

EbonyGold screw
: GSASR

G/H	3.5		5.0	
Type	Hex	Non-Hex	Hex	Non-Hex
	GSZAS**5535**	GSZAS**5535N**	GSZAS**5550**	GSZAS**5550N**

D ø6.5

R

EbonyGold screw
: GSASR

G/H	3.5		5.0	
Type	Hex	Non-Hex	Hex	Non-Hex
	GSZAS**6535**	GSZAS**6535N**	GSZAS**6550**	GSZAS**6550N**

ZioCera Angled Abutment

- Cement/combination/screw-retained prosthesis
- Zirconium abutment for an all ceramic prostheses ideal for anterior - esthetic zone
- Angle compensation up to 23° without the need for additional adjustment
- Fixture level impression
- Use a 1.2 hex driver
- Abutment screw included
- Recommended tightening torque : 20Ncm(mini), 30Ncm(regular)
- Packing unit : abutment + EbonyGold screw

Abutment + EbonyGold screw order code
: product code + **WH** (ex : GS17ZAS5530N**WH**)

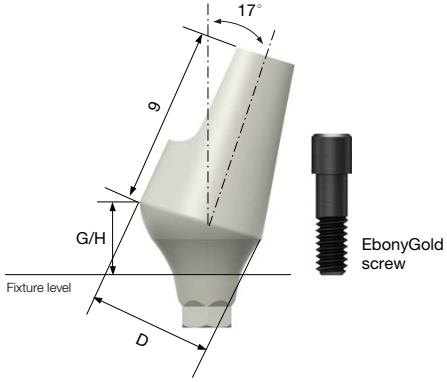

D ø5.5

R

EbonyGold screw
: GSASR

G/H	3.0	
Type	Hex	Non-Hex
	GS17ZAS**5530**	GS17ZAS**5530N**

D ø6.5

R

EbonyGold screw
: GSASR

G/H	4.0	
Type	Hex	Non-Hex
	GS17ZAS**6540**	GS17ZAS**6540N**

Quick Temporary Abutment

- Cement/screw-retained prosthesis
- A provisional prostheses for immediate loading
- Prep able and resin friendly
- Use a 1.2 hex driver
- Recommended tightening torque : 20Ncm(mini/regular)
- Packing unit : abutment + Ti screw

Abutment + Ti screw order code
: product code + **TH** (ex : TSQTA5550**TH**)

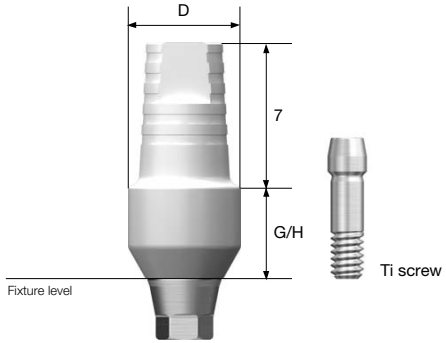

D ø4.0

M

Ti screw
: GSABSMT

G/H	1.5		5.0	
Type	Hex	Non-Hex	Hex	Non-Hex
	TSQTA**4015M**	TSQTA**4015MN**	TSQTA**4050M**	TSQTA**4050MN**

D ø4.5

M

Ti screw
: GSABSMT

G/H	1.5		5.0	
Type	Hex	Non-Hex	Hex	Non-Hex
			TSQTA**4550**	TSQTA**4550N**

Quick Temporary Abutment

D ø4.5

R

Ti screw
: GSABSST

G/H	1.5		5.0	
Type	Hex	Non-Hex	Hex	Non-Hex
	TSQTA**4515R**	TSQTA**4515RN**	TSQTA**4550R**	TSQTA**4550RN**

D ø5.5

R

Ti screw
: GSABSST

G/H	1.5		5.0	
Type	Hex	Non-Hex	Hex	Non-Hex
	-	-	TSQTA**5550**	TSQTA**5550N**

Temporary Abutment

- Cement/screw abutment for temporary prosthesis manufacture
- After prep, used to make temporary prosthesis
- Fixture level impression
- Using 1.2 hex driver
- Recommended tightening torque : 20Ncm(mini/regular)
- Packing unit : abutment + Ti screw

Abutment + Ti screw order code
: product code + **TH** (ex : GSTTA4510**TH**)

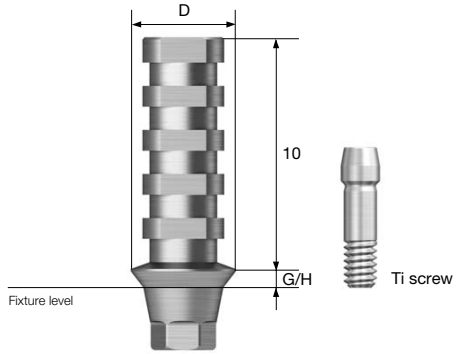

D ø4.0

M

Ti screw
: GSABSMT

G/H	1.0		3.0	
Type	Hex	Non-Hex	Hex	Non-Hex
	GSTTA**4010**	GSTTA**4010N**	GSTTA**4030**	GSTTA**4030N**

D ø4.5

R

Ti screw
: GSABSST

G/H	1.0		3.0	
Type	Hex	Non-Hex	Hex	Non-Hex
	GSTTA**4510**	GSTTA**4510N**	GSTTA**4530**	GSTTA**4530N**

PROSTHETIC FLOW DIAGRAM 4

Multi / Multi Angled

Abutment Level Impression

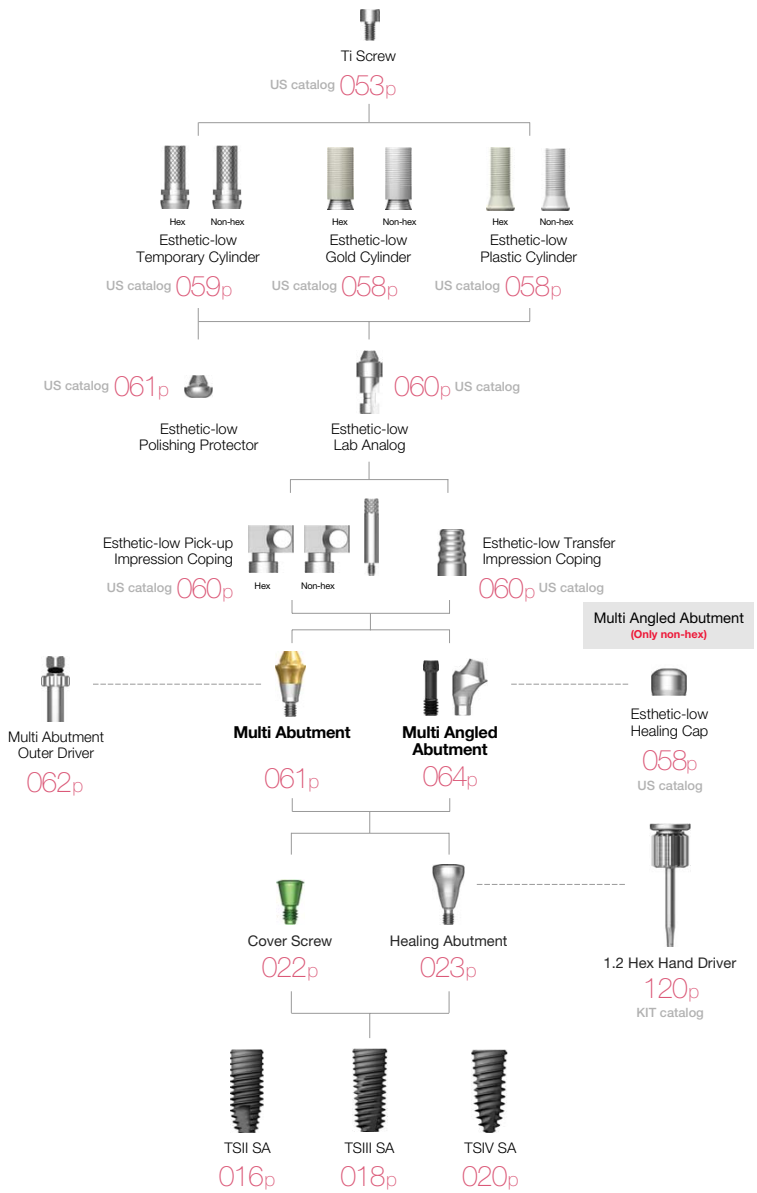

Multi Abutment

- Screw-retained prosthesis for multiple prosthetic options
- Same platform as the multi angled abutment
- Restorative components : US esthetic low cylinder (regular/non-hex)
- Torque using multi abutment outer driver (code : MAOD)
- Recommended tightening torque : 30Ncm(mini/regular)
- Packing unit : abutment + carrier

Abutment + carrier order code
: product code + **P** (ex : TSMA5030**P**)

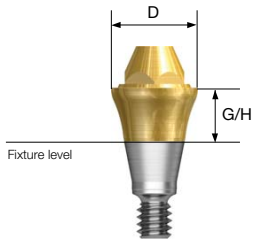

D ø4.8

M

G/H	1.0	2.0	3.0	4.0	5.0
	TSMA**5010M**	TSMA**5020M**	TSMA**5030M**	TSMA**5040M**	TSMA**5050M**

D ø4.8

R

G/H	1.0	2.0	3.0	4.0	5.0
	TSMA**5010**	TSMA**5020**	TSMA**5030**	TSMA**5040**	TSMA**5050**

Multi Abutment Components

Multi Abutment Outer Driver

• Multi abutment torque driver

MAOD

Multi Abutment Machine Driver

• Multi abutment machine driver

MAMD

Multi Abutment NP-Cast Cylinder

• Used in the manufacture of screw abutment prosthesis in multi abutments
• Used for customized prosthesis by casting with non-precious alloy
• Cylinder's melting temperature : 1400~1550˚C
• Using 1.2 hex driver
• Recommended tightening torque : 20Ncm
• Packing unit : cylinder + Ti cylinder screw

Abutment + Ti Screw order Code
: product code + **TH** (ex : TSMN500**TH**)

R Regular

D Type	Hex	Non-Hex
	TSMN**500**	TSMN**500N**

Multi Combination Cylinder

• Used in the manufacture of combination abutment prosthesis in multi abutment
• Using 1.2 hex driver
• Recommended tightening torque : 20Ncm
• Packing unit : cylinder + Ti cylinder screw

Abutment + Ti screw order Code
: product code + **TH** (ex : TSMC500**TH**)

R Regular

D Type	Hex	Non-Hex
	TSMC**500**	TSMC**500N**

Multi Angled Abutment

- Screw-retained prosthesis for multiple prosthetic options
- Same platform as the multi angled abutment
- Angle compensation up to 108˚
- Restorative components : US esthetic low cylinder (regular/non-hex)
- Abutment screw included
- Use a 1.2 hex driver
- Recommended tightening torque : 20Ncm(mini), 30Ncm(regular)
- Packing unit : abutment + EbonyGold screw

Abutment + EbonyGold screw order code
: product code + **WH** (ex : GS17MAS4840**WH**)

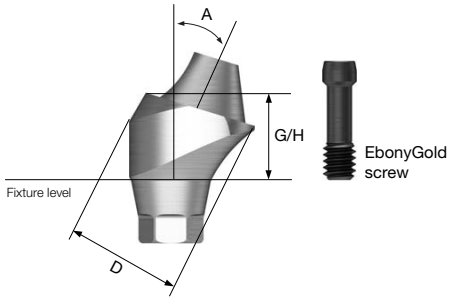

D ø4.8

M

EbonyGold screw
: GSMABSM

Angle \ G/H	2.5	3.0	4.0
17˚	GS17MAM**4820**	GS17MAM**4830**	GS17MAM**4840**

Angle \ G/H	3.5	4.0	5.0
30˚	GS30MAM**4830**	GS30MAM**4840**	GS30MAM**4850**

D ø4.8

R

EbonyGold screw
: GSMABSS

Angle \ G/H	2.5	3.0	4.0
17˚	GS17MAS**4820**	GS17MAS**4830**	GS17MAS**4840**

Angle \ G/H	3.5	4.0	5.0
30˚	GS30MAS**4830**	GS30MAS**4840**	GS30MAS**4850**

OSSTEM IMPLANT

Esthetic-low Abutment Components

Esthetic-low Healing Cap

- Dedicated protect cap for Esthetic-low Abutment
- Hand tightened with a 1.2 hex driver

M Mini
R Regular
W Wide

D \ H	6.0
Ø 4.8 / Ø 4.8	MHCR100
Ø 5.5 / Ø 5.5 PS	MHCW100

Esthetic-low Gold Cylinder

- Used for producing screw-retained prosthesis in Esthetic-low Abutment screw
- Used to produce customized prosthesis by casting with gold alloy
- Cylinder melting temperature : 1,400~1,450°C
- Tightened with 1.2 hex driver
- Recommended tightening torque : 20Ncm
- Packing unit : Cylinder + Ti cylinder screw

Cylinder + Ti screw order code
: Product code + TH (ex : MGR200TH)

M Mini
R Regular
W Wide

D \ Type	Hex	Non-Hex
		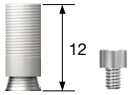
Ø 4.8 / Ø 4.8	MGR200	MGR100
Ø 5.5 / Ø 5.5 PS	MGW200	MGW100

Ti screw
: MTS200 (Ø 4.8 / Ø 4.8)
: WTS200 (Ø 5.5 / Ø 5.5PS)

Esthetic-low Plastic Cylinder

- Used for producing screw-retained prosthesis in Esthetic-low Abutment screw
- Used to produce customized prosthesis by casting with nonprecious metal alloy
- Tightened with a 1.2 hex driver
- Recommended tightening torque : 20Ncm
- Packing unit : Cylinder + Ti cylinder screw

Cylinder + Ti screw order code
: Product code + TH (ex : MEPR200TH)

M Mini
R Regular
W Wide

D \ Type	Hex	Non-Hex
		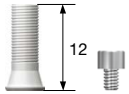
Ø 4.8 / Ø 4.8	MEPR200	MEPR100
Ø 5.5 / Ø 5.5 PS	MEPW200	MEPW100

Ti screw
: MTS200 (Ø 4.8 / Ø 4.8)
: WTS200 (Ø 5.5 / Ø 5.5PS)

Esthetic-low Temporary Cylinder

Standard Type

- Used for producing temporary prosthesis in Esthetic-low Abutment (Ti Gr-3)
- Tightened with a 1.2 hex driver
- Recommended tightening torque : 20Ncm
- Packing unit : Cylinder + Ti cylinder screw

Cylinder + Ti screw order code
: Product code + TH (ex : MTR200TH)

M Mini
R Regular
W Wide

D \ Type	Hex	Non-Hex
		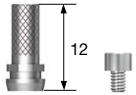
Ø 4.8 / Ø 4.8	MTR200	MTR100
Ø 5.5 / Ø 5.5 PS	MTW200	MTW100

Ti screw
: MTS200 (Ø 4.8 / Ø 4.8)
: WTS200 (Ø 5.5 / Ø 5.5PS)

Narrow Type

- Used for producing temporary prosthesis in Esthetic-low Abutment (Ti Gr-3)
- Suitable for overdenture with thinner diameter compared to the standard type
- Tightened with a 1.2 hex driver
- Recommended tightening torque : 20Ncm
- Packing unit : Cylinder + Ti cylinder screw

Cylinder + Ti screw order code
: Product code + TH (ex : NMTR200TH)

M Mini
R Regular
W Wide

D \ Type	Hex	Non-Hex
		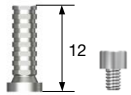
Ø 4.8 / Ø 4.8	NMTR200	NMTR100
Ø 5.5 / Ø 5.5 PS	NMTW200	NMTW100

Ti screw
: MTS200 (Ø 4.8 / Ø 4.8)
: WTS200 (Ø 5.5 / Ø 5.5PS)

Esthetic-low Abutment Components

Esthetic-low Pick-up Impression Coping

- Components for fixture level impression taking
- Pick-up impression coping for Esthetic-low Abutment
- Hand tightened with a 1.2 hex driver
- Packing unit : Impression coping body + Guide pin(*)

M Mini
R Regular
W Wide

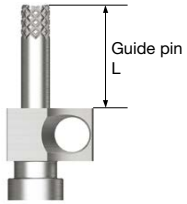

D \ L	Hex	Non-Hex	Guide Pin 5	Guide Pin 10	Guide Pin 12	Guide Pin 15
ø4.8/ø4.8	MSR200	MSR100	GP100	GP150*	GP170	GP200
ø5.5/ø5.5 PS	MSW200	MSW100	GPW100	GPW150*	-	-

Esthetic-low Transfer Impression Coping

- Transfer impression coping for Esthetic-low Abutment
- Hand tightened

M Mini
R Regular
W Wide

D \ H	8.0
ø4.8/ø4.8	MTTR100
ø5.5/ø5.5 PS	MTTW100

Esthetic-low Lab Analog

- Lab analog for Esthetic-low Abutment
- Hand tightened with a 1.2 hex driver

M Mini
R Regular
W Wide

D	
ø4.8/ø4.8	MERR300
ø5.5/ø5.5 PS	MERW300

Esthetic-low Polishing Protector

- Protecting the joint in the polishing procedure after producing a prosthesis using esthetic GoldCast/plastic cylinder
- Hand tightened with a 1.2 hex driver

M Mini
R Regular
W Wide

D	
ø4.8/ø4.8	MPCR100
ø5.5/ø5.5 PS	MPCW100

PROSTHETIC FLOW DIAGRAM 5

Convertible

Abutment Level Impression

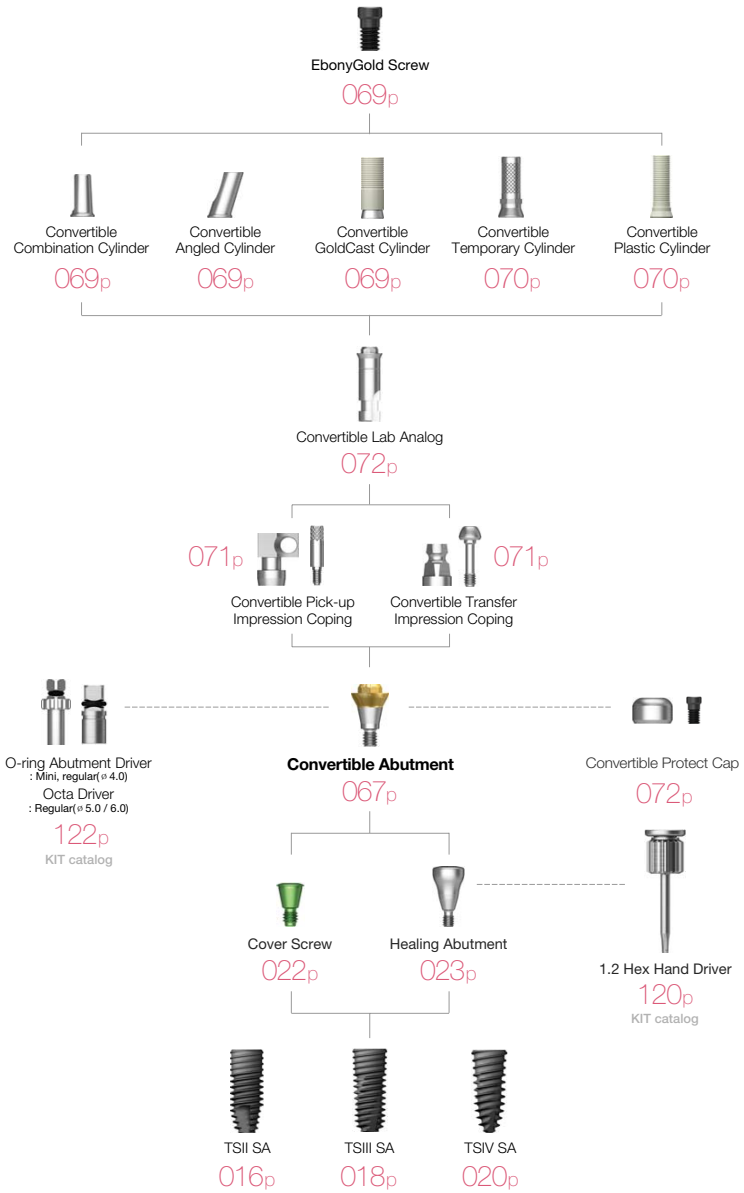

Convertible Abutment

- Screw-retained prosthesis in multiple scenarios
- Angle compensation up to 60˚
- Torque using convertible abutment outer driver
  - ø 4.0 : torque using o-ring abutment driver (code : AORD)
  - ø 5.0/6.0 : torque using octa abutment driver (code : ODSL/ODSS)
- Recommended tightening torque : 30Ncm(mini/regular)
- Packing unit : abutment + carrier

Abutment + carrier order code
: product code + **P** (ex : GSCA5030**P**)

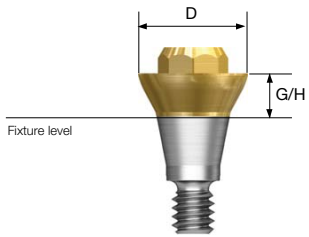

D ø4.0

M

G/H	1.0	2.0	3.0	4.0	5.0
	GSCA**4010**	GSCA**4020**	GSCA**4030**	GSCA**4040**	-

D ø4.0

R

G/H	1.0	2.0	3.0	4.0	5.0
	GSCAS**4010**	GSCAS**4020**	GSCAS**4030**	GSCAS**4040**	-

Convertible Abutment

D ø5.0

R

G/H	1.0	2.0	3.0	4.0	5.0
	GSCA**5010**	GSCA**5020**	GSCA**5030**	GSCA**5040**	GSCA**5050**

D ø6.0

R

G/H	1.0	2.0	3.0	4.0	5.0
	GSCA**6010**	GSCA**6020**	GSCA**6030**	GSCA**6040**	GSCA**6050**

Convertible Abutment Components

Convertible Combination Cylinder

- Combination-retained prostheses possible
- Use a 1.2 hex driver
- Recommended tightening torque : 20Ncm
- Packing unit : cylinder + EbonyGold cylinder screw

Abutment + EbonyGold screw order code
: product code + **WH** (ex : GSCC5070T**WH**)

M Mini

R Regular

D \ H	7.0		
Type	Hex	Non-Hex	Octa
ø 4.0 / ø 4.0	GSCC**4070T**	GSCC**4070TN**	-
ø 5.0	-	-	GSCC**5070T**
ø 6.0	-	-	GSCC**6070T**

EbonyGold screw
: GSFSM (Ø 4.0 / Ø 4.0)
: GSFSR (Ø 5.0 / Ø 6.0)

Convertible Angled Cylinder

- Combination-retained prosthesis possible
- Angle compensation up to 17˚
- Use a 1.2 hex driver
- Recommended tightening torque : 20Ncm
- Packing unit : cylinder + EbonyGold cylinder screw

Abutment + EbonyGold screw order code
: product code + **WH** (ex : GSAC5080T**WH**)

M Mini

R Regular

D \ H	8.0		
Type	Hex	Non-Hex	Octa
ø 4.0 / ø 4.0	GSAC**4080T**	GSAC**4080TN**	-
ø 5.0	-	-	GSAC**5080T**
ø 6.0	-	-	GSAC**6080T**

EbonyGold screw
: GSFSM (Ø 4.0 / Ø 4.0)
: GSFSR (Ø 5.0 / Ø 6.0)

Convertible GoldCast Cylinder

- Screw-retained prosthesis
- Customized prosthesis cast with gold alloy
- Cylinder melting point: 1400~1450˚C
- Use a 1.2 hex driver
- Recommended tightening torque : 20Ncm
- Packing unit : cylinder + EbonyGold cylinder screw

Abutment + EbonyGold screw order code
: product code + **WH** (ex : GSGC500**WH**)

M Mini

R Regular

D \ H	12		
Type	Hex	Non-Hex	Octa
ø 4.0 / ø 4.0	GSGC**400**	GSGC**400N**	-
ø 5.0	-	-	GSGC**500**
ø 6.0	-	-	GSGC**600**

EbonyGold screw
: GSFSM (Ø 4.0 / Ø 4.0)
: GSFSR (Ø 5.0 / Ø 6.0)

Convertible Abutment Components

Convertible Temporary Cylinder

- Provisional prosthesis (Ti Gr-3)
- Use a 1.2 hex driver
- Recommended tightening torque : 20Ncm
- Packing unit : cylinder + Ti cylinder screw

Abutment + Ti screw order code
: product code + **TH** (ex : GSCTC500**TH**)

M Mini

R Regular

D \ H	12		
Type	Hex	Non-Hex	Octa
Ø 4.0 / Ø 4.0	GSCTC**400T**	GSCTC**400TN**	-
Ø 5.0	-	-	GSCTC**500T**
Ø 6.0	-	-	GSCTC**600T**

EbonyGold screw
: GSFSMT (Ø 4.0 / Ø 4.0)
: GSFSRT (Ø 5.0 / Ø 6.0)

Convertible Plastic Cylinder

- Screw-retained prosthesis
- Customized prosthesis cast with non-precious alloys
- Use a 1.2 hex driver
- Recommended tightening torque : 20Ncm
- Packing unit : cylinder + EbonyGold cylinder screw

Abutment + EbonyGold screw order code
: product code + **WH** (ex : GSCPL500**WH**)

M Mini

R Regular

D \ H	12		
Type	Hex	Non-Hex	Octa
Ø 4.0 / Ø 4.0	GSCPL**400**	GSCPL**400N**	-
Ø 5.0	-	-	GSCPL**500**
Ø 6.0	-	-	GSCPL**600**

EbonyGold screw
: GSFSM (Ø 4.0 / Ø 4.0)
: GSFSR (Ø 5.0 / Ø 6.0)

Convertible Pick-up Impression Coping

- Components for fixture level impression
- A pick-up impression coping
- Use a 1.2 hex driver (torque manually)
- Packing unit : impression coping body + guide pin(*)

M Mini

R Regular

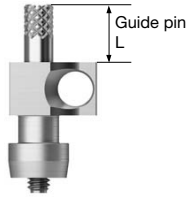

D \ L		Guide Pin 0	Guide Pin 5.0
Ø 4.0 / Ø 4.0	GSPIC**400** (Hex / Yellow)	-	GSCGP**400S**	GSCGP**400L***
Ø 5.0	GSPIC**500** (Octa / Silver)	GSCGP**500S**	GSCGP**500L***
Ø 6.0	GSPIC**600** (Octa / Blue)		

Convertible Transfer Impression Coping

- Transfer impression coping
- Use a 1.2 hex driver (torque manually)
- Packing unit : impression coping body + guide pin

M Mini

R Regular

D	
Ø 4.0 / Ø 4.0	GSTIC**400** (Hex / Yellow)
Ø 5.0	GSTIC**500** (Octa / Silver)
Ø 6.0	GSTIC**600** (Octa / Blue)

Convertible Abutment Components

Convertible Protect Cap

- Protective cap
- Use a 1.2 hex driver (fastened manually)
- Packing unit : protect cap + EbonyGold screw

Abutment + EbonyGold screw order code
: product code + **WH** (ex : GSCHC500**WH**)

M Mini

R Regular

D

ø 4.0 / ø 4.0	GSCHC**400** (Hex)	-	-
ø 5.0	-	GSCHC**500** (Non-Octa)	-
ø 6.0	-	-	GSCHC**600** (Non-Octa)

EbonyGold screw
: GSFSM (**Ø 4.0 / Ø 4.0**)
: GSFSR (**Ø 5.0 / Ø 6.0**)

Convertible Lab Analog

- A lab analog
- Use a 1.2 hex driver (fastened manually)

M Mini

R Regular

D

ø 4.0 / ø 4.0	GSCLA**400** (Hex)	-	-
ø 5.0	-	GSCLA**500** (Octa)	-
ø 6.0	-	-	GSCLA**600** (Octa)

Convertible Polishing Protector

- Protects GoldCast/plastic cylinder joints during polishing process
- Use a 1.2 hex driver (torque manually)

M Mini

R Regular

D

ø 4.0 / ø 4.0	GSCPC**400** (Hex)	-	-
ø 5.0	-	GSCPC**500** (Octa)	-
ø 6.0	-	-	GSCPC**600** (Octa)

Stud / Locator®

Overdenture

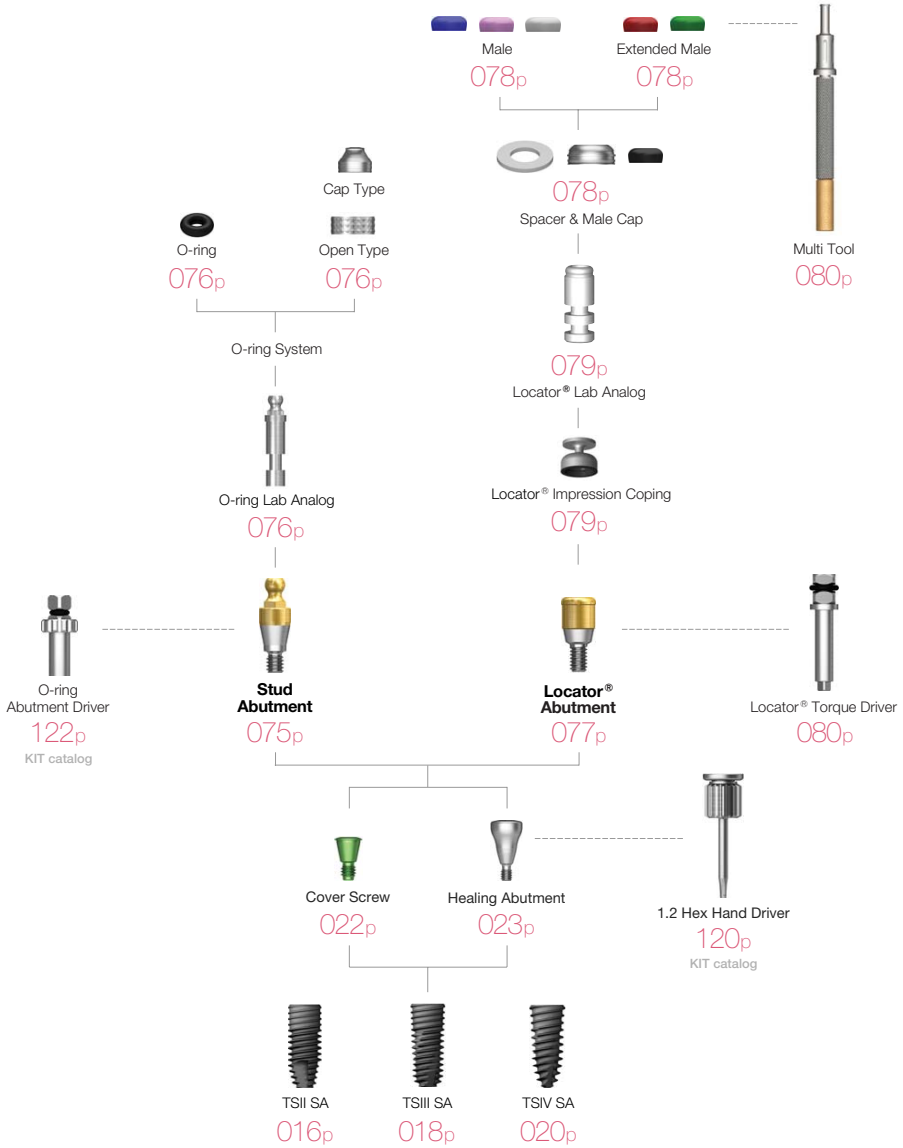

Stud Abutment

- Retains overdenture with o-ring system
- Angle compensation up to 20°
- Torque using outer driver (code : AORD)
- Recommended tightening torque : 30Ncm(mini/regular)
- Ball head diameter
  - Small size : ø 1.7 (H 2.5mm)
  - Normal size : ø 2.25 (H 3.4mm)

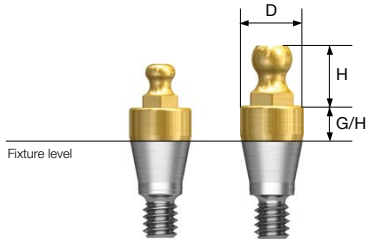

D ø3.5

M

G/H	1.0	2.0	3.0	4.0	5.0	6.0
Small Size	GSST3510M	GSST3520M	GSST3530M	GSST3540M	GSST3550M	GSST3560M
Normal Size	GSSAM3510	GSSAM3520	GSSAM3530	GSSAM3540	GSSAM3550	GSSAM3560

D ø3.5

R

G/H	1.0	2.0	3.0	4.0	5.0	6.0
Small Size	GSST3510R	GSST3520R	GSST3530R	GSST3540R	GSST3550R	GSST3560R
Normal Size	GSSA3510	GSSA3520	GSSA3530	GSSA3540	GSSA3550	GSSA3560

Stud Abutment Components

O-ring Retainer Cap Set

- O-ring housing
- Place appropriate o-ring in the metal housing before connecting to the abutment
- Packing unit : retainer cap + o-ring

RCS01

O-ring Retainer Set

- Used when vertical dimension is shorter than the retainer cap
- Packing unit : retainer cap + o-ring

RS01

O-ring Set

- O-ring set
- Packing unit : o-ring x 5ea

OAON01S

O-ring Lab Analog

- A lab analog for o-ring abutment
- Packing unit : o-ring x 5ea

OAL

Locator® Abutment

- Genuine zest anchors abutment
- Angle compensation up to 40˚
- 1.5mm lower profile, attachment with various and stable retention forces
- Torque using a dedicated outer driver (code : TWLDLK/TWLDLSK)
- Recommended tightening torque : 30Ncm

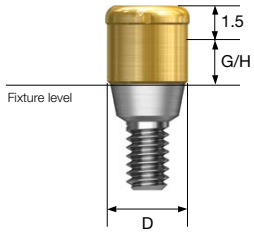

D ø3.7

M

G/H	1.0	2.0	3.0	4.0	5.0
	HGLCA**3510M**	HGLCA**3520M**	HGLCA**3530M**	HGLCA**3540M**	HGLCA**3550M**

D ø3.7

R

G/H	1.0	2.0	3.0	4.0	5.0
	HGLCA**4010S**	HGLCA**4020S**	HGLCA**4030S**	HGLCA**4040S**	HGLCA**4050S**

Locator® Abutment Components

Locator® Male Processing Kit

- Components
  - Block out spacer / denture cap connected black processing male
  - Replacement male blue/pink/clear
- A full range of retentive males are included with each denture cap to allow personalized retention for each specific patient
- Locator core tool places and removes nylon retentive males
- Packing unit : 2 sets

LMPS

Locator® Replacement Male

- Retention force : approx. 6N
- Angle compensation up to 20˚
- Packing unit : 4ea

LRM06S

- Retention force : approx. 12N
- Angle compensation up to 20˚
- Packing unit : 4ea

LRM12S

- Retention force : approx. 22N
- Angle compensation up to 20˚
- Packing unit : 4ea

LRM22S

Locator® Extended Replacement Male

- Retention force : approx. 6N
- Angle compensation up to 20~40˚
- Packing unit : 4ea

LEM06S

- Retention force : approx. 12N
- Angle compensation up to 20~40˚
- Packing unit : 4ea

LEM12S

Locator® Black Processing Male

- A nylon male used in prosthesis fabrication process
- Packing unit : 4ea

LBPS

Locator® Block Out Spacers

- Place block-out spacers on the heads of the locator abutments. Position denture cap with integrated black processing onto the locator abutments. If necessary add additional block-out spacers until no gap is visible between female, block-out spacer and gum.
- Packing unit : 20ea

LBSS

Locator® Impression Coping

- A pick up impression coping
- Closed tray
- Packing unit : 4ea

LICS

Locator® Lab Analog

- A lab analog for locator abutment
- Packing unit : 4ea

LAL40S

Locator® Abutment Components

Locator® Core Tool

- Places and removes nylon retentive males in the denture cap
- Separates into three different tools, includes a hand driver for locator abutment

LCCT

Locator® Torque Driver

- A torque driver

Type	Short	Long
	TWLD**SK**	TWLD**LK**

Port Angled Abutment

- Abutment level impression
- Angle compensation up to 60˚
- Use a 1.2 hex driver
- Recommended tightening torque : 20Ncm(mini), 30Ncm(regular)
- Packing unit : abutment + EbonyGold screw

Abutment + EbonyGold screw order code
: product code + **WH** (ex : TS30PA455R**WH**)

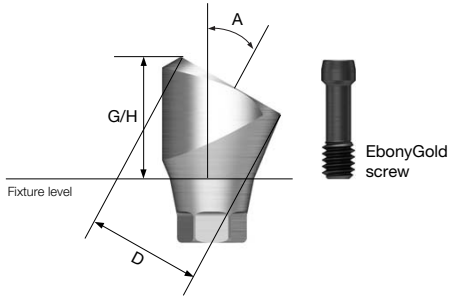

D ø4.6

M

EbonyGold screw
: GSMABSM

Angle \ G/H	4.0	5.0
10˚	TS10PA**454M**	TS10PA**455M**

Angle \ G/H	4.0	5.0
17˚	TS17PA**454M**	TS17PA**455M**

Angle \ G/H	4.0	5.0
30˚	TS30PA**454M**	TS30PA**455M**

Port Angled Abutment

D ø4.6

R

EbonyGold screw
: GSMABSS

Angle \ G/H	4.0	5.0
10°	TS10PA**454R**	TS10PA**455R**

Angle \ G/H	4.0	5.0
17°	TS17PA**454R**	TS17PA**455R**

Angle \ G/H	4.0	5.0
30°	TS30PA**454R**	TS30PA**455R**

Port Angled Abutment Components

Port Angled Abutment Head

- Torque using a locator torque driver
- Recommended tightening torque : 20Ncm
- Packing unit : abutment head + carrier

PTAAH450P

Instructions for Use (AUG. 2017, Ver. 5.5)

Description of Osstem implant system

Osstem Implant is a brand for implant materials for dental practices, and the fixture is made mainly of titanium. The abutment, prosthetic components and tools for the Osstem Implant system are compatible with the Osstem Implant fixture only. Using this product in combination with products from other manufacturers may cause various problems including loosening and fracture due to incomplete locking and compatibility issues. Refer to the manual or the catalogue or our website (www.osstem.com) for details. See the product label for the product code, specifications, manufacturing date, and expiration date.

Sterility

The fixture, cover screw, and healing abutment are cleansed and sterilized with gamma radiation. This product is a disposable sterilized medical device intended for one-time use. In order to prevent contamination or infection of the product or operated site, the product must be used using a sterilized instrument in a sterilized environment. Damaged products, products with open packaging, or expired products must be discarded due to potential risks of contamination, infection, or osseointegration failure. Re-sterilization or re-use of the product may result in infection, osseointegration failure, or implant damage due to reduced accuracy.

Storage condition

Keep the product in a dry place at room temperature(1~30℃). Keep away from direct sunlight.

General precautions

The surgical technology of dental implant involves an expert, complex procedure. Formal training is required to perform implant surgery. Careful considerations must be made before the operation in case of bone disorders (osteoporosis, osteomalacia) or metabolic disorders of the bone.

Precautions

Determine the local anatomy and suitability of the available bone for implant placement. Prepare the implant considering the expected situations and cautions. Excessive occlusal load may cause loosening or fracture of an implant. In order to avoid this condition, the implant must be placed in accurate location and direction considering the relationship between the implant and opposing dentition. Visual inspection as well as panoramic and periapical radiographs are essential to determine anatomical landmarks, occlusal conditions, periodontal status, and the adequacy of the bone. Adequate radiographs, direct palpation, and visual inspection of the implant site are necessary prior to implant surgery.

Procedural precautions

Osstem Implant System is for single and two stage surgical procedures. As much as possible, try to minimize damage to the cell tissue and surgical trauma, pay special attention to maintaining the temperature at the implant site and removal of the source of contamination and infection. All drills and taps must be sufficiently and continuously irrigated for cooling during use. Implant placement should be accomplished at very low speed (25-30 rpm) or manually. Excessive torque (greater than 55Ncm) in the fixture placement can have adverse effects such as partial fracture or necrosis of the bone. Placing an implant tilted by 30˚ or higher is not recommended due to possible fracture of implant. Immediate loading to the fixture right after the surgery should be avoided. The bone quality and initial stability after fixture placement are important elements in determining the appropriate loading time. Mini-diameter implant or implant with diameter of 4.0 or less and which integrates with angled abutment may be fractured due to limitations of structural rigidity. They are not recommended for use in a posterior area. The Ultra-Wide fixtures are intended to be used only to replace molar teeth and that angled abutments are not to be used with the Ultra-Wide fixtures. Evaluate the quantity of bone and radiographs to assess any potential anatomical contraindications to use of the Ultra-Wide fixture. For the placement of the Short Implant (diameter is 5mm or more and length is shorter than 7mm) which is used on the molar region only, clinicians should closely examine the patients for any of the following conditions: 1) perimplant bone loss, 2) changes to implant's response to percussion, 3) radiographic changes in bone to implant contact along the implant's length. If a short implant shows mobility or greater than 50% bone loss, the implant should be considered for possible removal. And clinicians should consider a two-stage surgical approach, splinting a short implant to an additional implant, and placement of the widest possible fixture. Allow longer healing periods for osseointegration before fabrication of the prosthesis and avoid immediate loading. Products with diameter of 3.25mm or less must be used exclusively for mandibular anterior teeth in order to prevent fracture due to excessive occlusal load. It is recommended that you should avoid applying HA coated fixture to hard bone, and the insertion torque of the implant should be less than 35Ncm, because cracks or damages might occur in the coated layer during implant placement. The surfaces of CA and SOI have the same physical shape as the SA surface made through blasting and etching treatments. After the SA surface treatment, to prevent the products' exposure to the atmosphere, CA is stored in solution, whereas SOI is stored in water-film coating form; it is designed to maintain the chemically activated state of the SA surface. Thus, CA or SOI products should be implanted in the target region at least within 15 minutes of taking them out of the container.

Warning

The selection of inappropriate patients and surgical methods can cause implant failure or loss of bone supporting the implant. Osstem implants must not be used for purposes other than the recommended use and must not be remodeled. Implant mobility, bone loss, and chronic infection can result in failure of the implant surgery.

Indications for use

The Osstem Implant System is an artificial dental root that has been designed for use in dental implant treatment in order to recover lost teeth. The system is implanted via a surgical method in maxillary or mandibular bone to replace natural dental root. The Osstem Implant System is indicated for use in partially or fully edentulous mandibles and maxillae, in support of single or multiple-units restorations including; cemented retained, screw retained, or overdenture restorations, and final or temporary abutment support for fixed bridgework. It is intended for delayed loading. Products with diameter of 3.25mm or less must be used exclusively for mandibular anterior teeth in order to prevent fracture due to excessive occlusal load.

Side effects

A few problems may occur after the operation (loss of implant stability, damage of prosthesis, etc.). Deficient quality and quantity of the remaining bone, infection, allergic reaction, inferior oral hygiene or uncooperativeness of patient, implant mobility, partial deterioration of tissue, and improper position or arrangement of implants may cause the above mentioned problems.

Contraindications

Contraindications include the following, but are not limited to:

- Patients with hemophilia or difficulties related to bone or wound treatment
- Patients with uncontrollable diabetes, heavy smoker or alcoholic
- Patients whose immunity system is inactive due to chemical therapy or radiation therapy
- Patients with oral infection or inflammation (improper oral hygiene, bruxism)
- Patients with untreatable occlusion/joint disorder, insufficient dental arch space
- Any patient who is not suitable for an surgery

Manufacturer : Osstem Implant Co., Ltd.
203, Geoje-daero, Yeonje-gu, Busan, Korea
TEL 82-51-850-2500 FAX 82-51-861-4693

EC REP
DEUTSCHE OSSTEM GmbH.
Mergenthalerallee 35-37
65760 Eschborn, Germany
+49-(0)6196-777-5500

Storage condition
Dry place at room temperature

Rx only
For USA only : Federal law restricts this device to sale by or on the order of a dentist

2460

STERILE R — Sterilized using irradiation

Use by

Manufacture

Do not reuse

Date of manufacture

Keep away from sunlight

REF — Catalogue number

NON STERILE — Non-Sterile

Keep dry

LOT — Batch code

Do not resterilize

Caution, Consult accompanying documents

OSSTEM
IMPLANT