LOOP

Portal

- The Portal is a high security, aesthetic choice for your entrance
- It provides a high level of perimeter security
- Exported worldwide
- ULTRA LOW POWER CONSUMPTION 0.25W

AVAILABLE CONFIGURATIONS

- 3 arm (120°) and 4 arm (90°)
- Single and double

Applications

- Suited for applications requiring high volume access and high levels of security
- Used extensively in applications such as mines, factories, warehouses, colleges, building sites and stadiums

Designed For

- Interior and exterior installations
- Severe operating conditions

Technical Specifications

Power	110 Volt AC (220 Volt on request)
Power Consumption	50W (single turnstile) | 100W (double turnstile) – fail-safe mode
Solenoid Voltage	24 Volt DC (12 Volt DC on request)
Dimensions Single turnstile Dimensions Double turnstile	1,400 mm × 2,125 mm → 55.12 in × 83.66 in 2,150 mm × 2,125 mm → 84.65 in × 83.66 in
Rotor Diameter	1,200 mm → 47.24 in
Weight Single Turnstile Weight Double Turnstile	160 kg 255 kg

LOOP

Rotation Locking Mechanism

- CE conformity
- Ultra heavy-duty electromechanical rotation locking mechanism
- Bi-directional operation
- Designed by professional engineers
- Tried, tested and perfected over a period of over 20 years

Reliable Technology

- Suspended rotor technology – eliminating stress on the base bearing
- Self-centering rotation system – rotor returns to starting position after every rotation
- Shock absorbing rubber coupling system
- Anti-Trap® safety system – no mid-rotation locking or trapping in the event of a power failure
- Programmable logic with user diagnostic features
- Mechanical key override – clockwise and anti-clockwise directions (fail-secure)

Durable Features

- Zinc plated for corrosion resistance
- Ultra quiet, buffered solenoids and pawls
- Solenoids rated for 100% duty cycle
- Case hardened locking disk and pawls – eliminating any wear
- Factory settings need no further adjustment
- No routine maintenance whatsoever, ever

Guaranteed Manufactured

- 10 years mechanical guarantee
- 1 year electrical guarantee

LOOP

ROTALOK® Perpetual Base Bearing

- Fitted to all Loop turnstiles

Reliable Technology

- Combination of stainless steel and self-lubricating engineering plastics

Durable Features

- Designed for the harshest of conditions
- 100% corrosion resistant
- Unaffected by dust, dirt or moisture
- Self-lubricating

Guaranteed Manufactured

- 10 years mechanical guarantee
- 1 year electrical guarantee

Rotation Options

- Electrically controlled bi-directional rotation (factory standard)
- Mechanically controlled uni-directional rotation by means of key override
- Free rotation

Locking Options

- Fail-secure auto-lock on power failure (factory standard)
- Fail-safe auto-unlock on power failure
- Each direction of rotation configurable for either fail-secure or fail-safe operation

Fire Alarm Options

- Free rotation when triggered indefinitely

Power Options

- Battery backup with two 12 volt 7Ah batteries connected in series
  - Up to 5,500 transactions in fail-secure mode
  - Up to 270 minutes operation in fail-safe mode
- Solar panel with charge controller and battery system

Flat Roof Canopy Option

- Provides protection from the elements
- Anti-climb protection
- Low energy light on underside of canopy

LOOP

Special Physical Deisgn Options

- Restrictor tubes for increased security (4 arm turnstile only)
- 180° rotation setting for extra walkthrough space (4 arm turnstile only)
- Special narrow single turnstile design for 1,200 mm wide opening
- Special split cover for low ceilings
- Special internal mechanism dust cover for dirty environments
- Heavy-duty base for portability (with forklift channels)

Accesory Options

- Card / proximity reader mounting bracket
- Biometric / fingerprint reader mounting brackets
- Single / double pushbutton in plastic housing
- LCD transaction counter with reset key switch
- Random search device

Finish Option

- Mild steel with UV resistant polyester exterior powder coat finish (charcoal blue hammertone)
- Mild steel with hot dip galvanised finish ▲
- 304 grade brushed stainless steel
- 316 grade brushed stainless steel ▲
  - Suitable for highly corrosive environments (details available on request)
  - Other colours available on request

1. The rotation locking mechanism and electronic control panel – incorporates:
   A. Anti-Trap® safety system
   B. Suspended Rotor technology
   C. Mechanical key override
   D. Shock absorbing rubber coupling
2. Lockable top cover
3. 50mm diameter tube arms spaced 120mm apart
4. Access control reader mounting position
5. Rotarun® perpetual base bearing
6. Wiring side entry point
7. Wiring bottom entry point
8. Floor bolting positions – 7 off
9. Wall bolting positions – 2 off

LOOP

The Range

Single

Double

Single

Single Range

A.	Recommended opening width	56.30 in
B.	Turnstile width	55.12 in
C.	Recommended opening height	88.58 in
D.	Turnstile height	83.66 in
E.	Headroom	78.15 in

Double Range
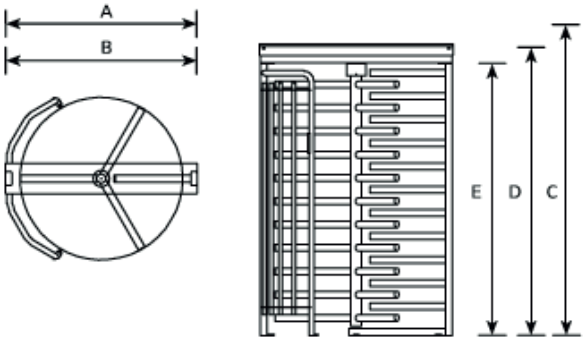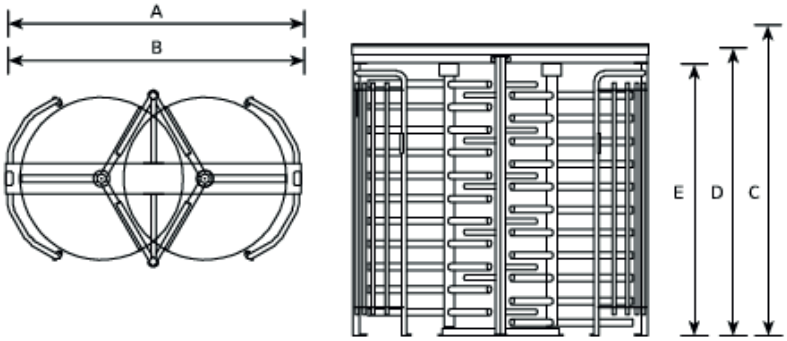
A.	Recommended opening width	85.83 in
B.	Turnstile width	84.65 in
C.	Recommended opening height	88.58 in
D.	Turnstile height	83.66 in
E.	Headroom	78.15 in