BAYER BUILT WOODWORKS, INC.

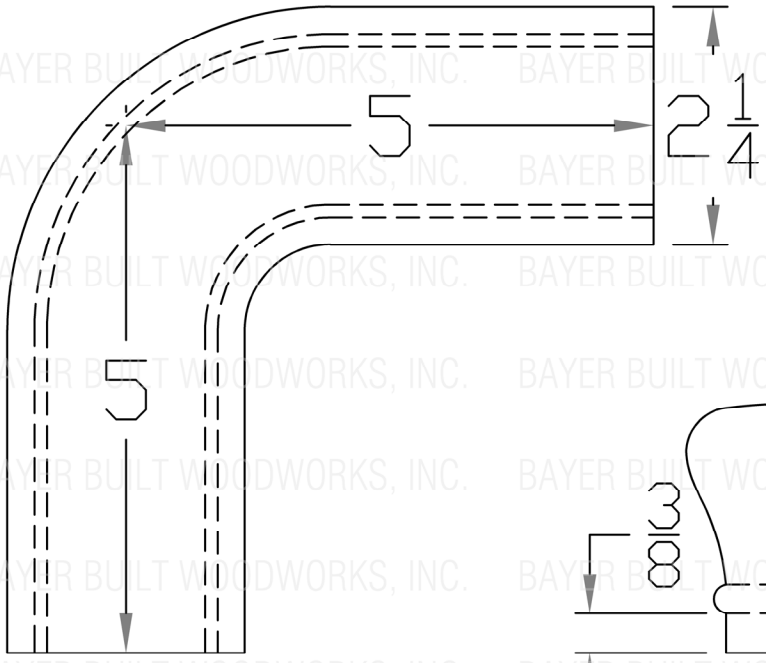

F7011

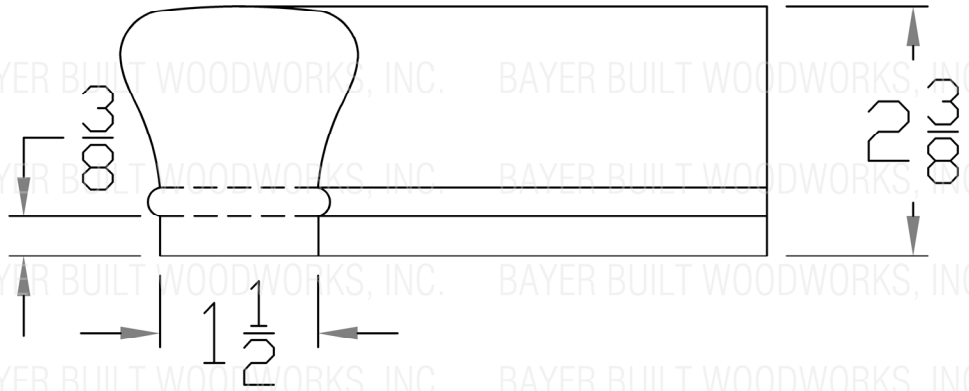

7011 QUARTERTURN