TSW212

MANAGED ETHERNET SWITCH



Energy & utilities

Enterprise

Industrial & automation

Retail

Smart city

MANAGED SWITCH

L2 with additional L3 features for advanced management capabilities

PROFINET & MORE

Supports PROFINET for automated data processing alongside other protocols, like EtherNet/IP and MRP

ETHERNET & SFP

8 x Gigabit Ethernet ports and 2 x SFP ports for fiber optic communication

TSWOS

Teltonika Networks OS for switches, intuitively designed for infinite configurations

Copyright © 2026, UAB TELTONIKA NETWORKS.
Specifications and information provided in this document are subject to change by UAB TELTONIKA NETWORKS without prior notice.
millbeck.co.uk

Site Manager	
Supported modes	Managed Device
Functionalities	FOTA updates, device status reporting, automatic reboot and port restart via ping/wget health checks, centralized VLAN and port configuration

INDUSTRIAL PROTOCOLS	
Profinet	Profinet Class B conformance (available with optional order code)

Ethernet	
ETH	Multi-layer managed 8 x ETH ports, 10/100/1000 Mbps supports auto MDI/MDIX crossover
Fibre	2 x SFP ports
IEEE 802.3 series standards	802.3i, 802.3u, 802.3ab, 802.3x, 802.3az

Network	
MRP	MRP client role, MRP manager role
Port aggregation	802.3ad (LACP)
L2 features	Loop protection, Forwarding table, VLAN, STP/RSTP
DHCP	DHCP server, DHCP client, DHCP static leases capable of using MAC with wildcards
Multicast	IGMP snooping, multicast querier support
Port Settings	Enable/disable, link speed control, port isolation, EEE (802.3az) management, Port Mirroring
L3 Features	Static IPv4 routing, static IPv6 routing, DHCPv6 client, static IPv6 address
Routing	Dynamic routing (BGP, OSPF v2, RIP v1/v2, EIGRP)

Security	
Authentication	PAM — preshared key, Radius & TACACS+, IP & login attempts block
MAC filtering support	Allow specific MAC addresses to connect through specified ports, ignore unauthorized or disable the port if an unauthorized MAC address is detected

API	
Teltonika Networks Web API (beta) support	Expand your device's possibilities by using a set of configurable API endpoints to retrieve or change data. For more information, please refer to this documentation: https://developers.teltonika-networks.com

Monitoring & Management	
WEB UI	HTTP/HTTPS, status, configuration, FW update, CLI, troubleshoot, multiple event log servers, firmware update availability notifications, event log, system log, kernel log, Internet status
FOTA	Firmware update from server, automatic notification
SSH	SSH (v1, v2)

Copyright © 2026, UAB TELTONIKA NETWORKS.
Specifications and information provided in this document are subject to change by UAB TELTONIKA NETWORKS without prior notice.
millbeck.co.uk

System Characteristics	
RAM	128MB, DDR3
FLASH storage	16 MB serial flash

Firmware/Configuration	
WEB UI	Update FW from file, check FW on server, configuration profiles, configuration backup
FOTA	Update FW
RMS	Update FW/configuration for multiple devices at once
Keep settings	Update FW without losing current configuration

FIRMWARE CUSTOMISATION	
Operating system	TSWOS (OpenWrt based Linux OS)
Supported languages	Busybox shell, Lua, C, C++
Development tools	SDK package with build environment provided

Power	
Connector	2-pin industrial DC power socket
Input voltage range	7 – 57 VDC, reverse polarity protection: -80Vmax
Power consumption	Idle: < 2.5 W / Max: 6 W

Physical Interfaces	
Ethernet	8 x RJ45 ports, 10/100/1000 Mbps
Fibre	2 x SFP ports
Status LEDs	1 x Power LED, 1 x Aux LED, 16 x ETH status LEDs, 2 x SFP status LEDs
Power	1 x 2-pin industrial DC power socket
Reset	Software reset button
Other	1 x Grounding screw

Physical Specification	
Casing material	Anodised aluminium housing and panels
Dimensions (W x H x D)	132 x 44.2 x 122.2 mm
Weight	615 g
Mounting options	Integrated DIN rail bracket; wall mount and flat surface (additional kit needed)

Copyright © 2026, UAB TELTONIKA NETWORKS.
Specifications and information provided in this document are subject to change by UAB TELTONIKA NETWORKS without prior notice.
millbeck.co.uk

Operating Environment	
Operating temperature	-40 °C to 75 °C
Operating humidity	5% to 95% non-condensing
Ingress Protection Rating	IP30

Services	
EtherNet/IP	Yes
SNMP V2, V3	Yes
LLDP	Yes
Network Management	802.1p class of service, 802.1x port-based network access control, 802.1Q VLAN

QoS	
QOS	Port priority, DSCP priority, 802.1p priority, TOS
Scheduling method	SP/WFQ/WRR
Bandwidth control	Rate limiting, storm control
Traffic Shaper	Port-based shaping

Diagnostics	
Tools	Cable diagnostic, ping, traceroute, nslookup

Performance Specifications	
Bandwidth (Non-blocking)	20 Gbps
Forwarding rate	14.88 Mpps
Packet buffer	512 KB
MAC address table size	8K entries
Jumbo frame support	10000 bytes

Copyright © 2026, UAB TELTONIKA NETWORKS.
Specifications and information provided in this document are subject to change by UAB TELTONIKA NETWORKS without prior notice.
millbeck.co.uk

Certification

EMEA	TSW212 CE TSW212 UKCA TSW212 RoHS TSW212 REACH TSW212 CITC TSW212 Kenya TSW212 ICASA TSW212 Morocco ANRT
APAC	TSW212 RCM TSW212 NBTC TSW212 SDPPI (POSTEL) TSW212 Giteki TSW212 MTCTE
AMERICAS	TSW212 FCC TSW212 IC(ISED) TSW212 UL/CSA Safety TSW212 Anatel TSW212 NOM
MISCELLANEOUS	TSW212 CB Scheme
INDUSTRY / SPECIAL CERTIFICATION	TSW212 DNV
SAFETY & ENVIROINMENTAL	TSW212 WEEE

Copyright © 2026, UAB TELTONIKA NETWORKS.
Specifications and information provided in this document are subject to change by UAB TELTONIKA NETWORKS without prior notice.
millbeck.co.uk

Hardware

FRONT VIEW

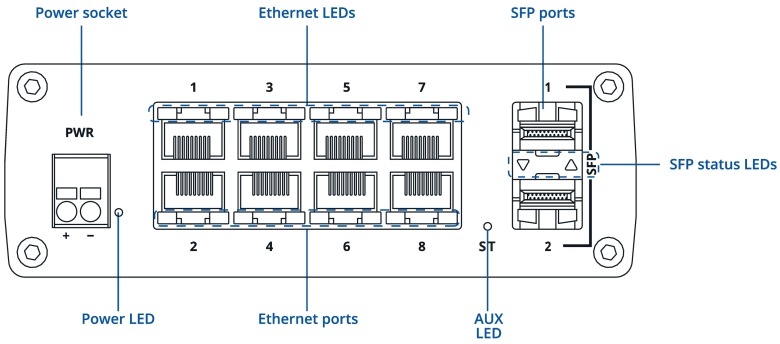

BACK VIEW

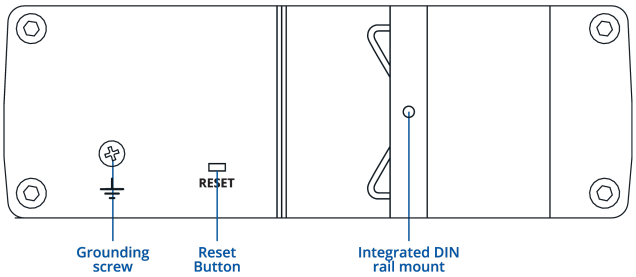

RJ45 LED MEANING

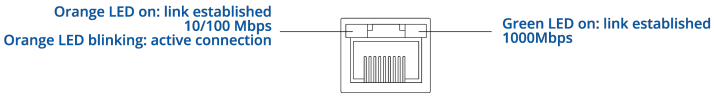

POWER SOCKET PINOUT

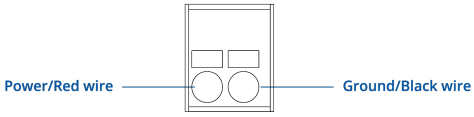

SFP LED MEANING

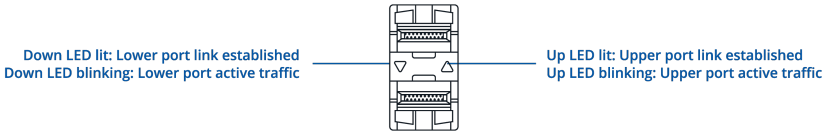

Copyright © 2026, UAB TELTONIKA NETWORKS.
Specifications and information provided in this document are subject to change by UAB TELTONIKA NETWORKS without prior notice.
millbeck.co.uk

Ordering

Standard package*



TSW212



QUICK START GUIDE

*Standard package contents may differ based on standard order codes.

For more information on all available packaging options – please contact us directly.

Copyright © 2026, UAB TELTONIKA NETWORKS.
Specifications and information provided in this document are subject to change by UAB TELTONIKA NETWORKS without prior notice.
millbeck.co.uk

Classification codes

HS Code: 851762
HTS: 8517.62.00

For more information on all available packaging options – please contact us directly.

Available versions

Hardware version	Supported frequencies	Standard order code / Package Contains
TSW212 *****0 **PROFINET disabled by default**	N/A	TSW212000000 / Standard package withouth PSU TSW212000300 / Standard Package with EU PSU without connector
TSW212 *****1 **Profinet Class B conformance**	N/A	TSW212000001 / Standard package withouth PSU

TSW212 spatial measurements

Available versions	
Device housing (W x H x D)*	132 x 44.2 x 122.2 mm
Box:	132 x 45 x 122 mm

Copyright © 2026, UAB TELTONIKA NETWORKS.
Specifications and information provided in this document are subject to change by UAB TELTONIKA NETWORKS without prior notice.
millbeck.co.uk

TOP VIEW

The figure below depicts the measurements of device and its components as seen from the top:

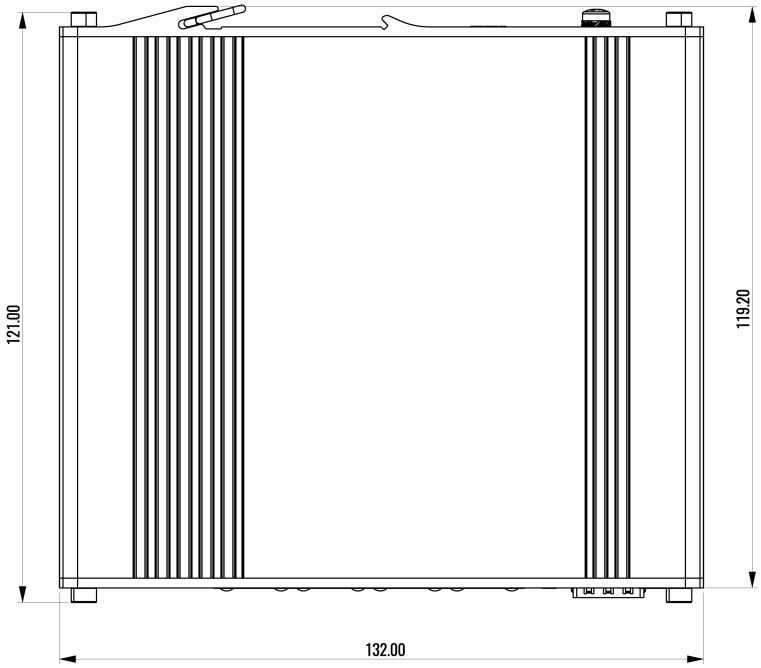

RIGHT VIEW

The figure below depicts the measurements of device and its components as seen from the right side:

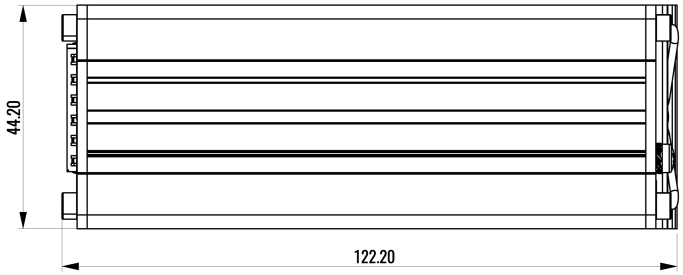

FRONT VIEW

The figure below depicts the measurements of device and its components as seen from the front panel side:

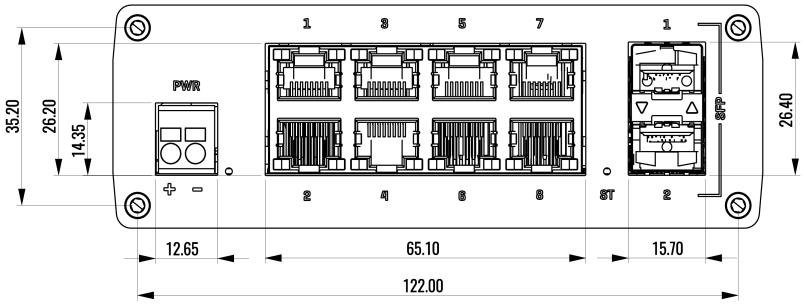

Copyright © 2026, UAB TELTONIKA NETWORKS.
Specifications and information provided in this document are subject to change by UAB TELTONIKA NETWORKS without prior notice.
millbeck.co.uk

REAR VIEW

The figure below depicts the measurements of device and its components as seen from the back panel side:

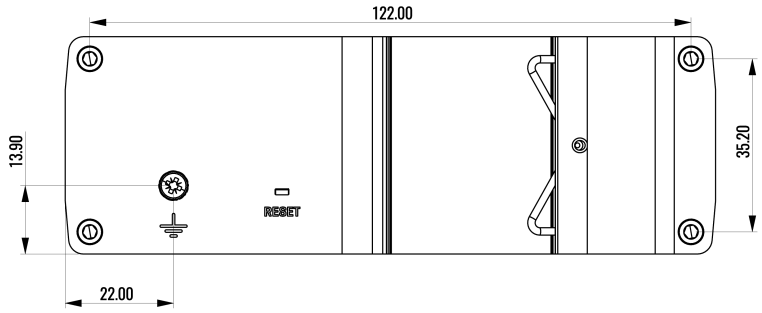

MOUNTING SPACE REQUIREMENTS

The figure below depicts an approximation of the device's dimensions when cables and antennas are attached:

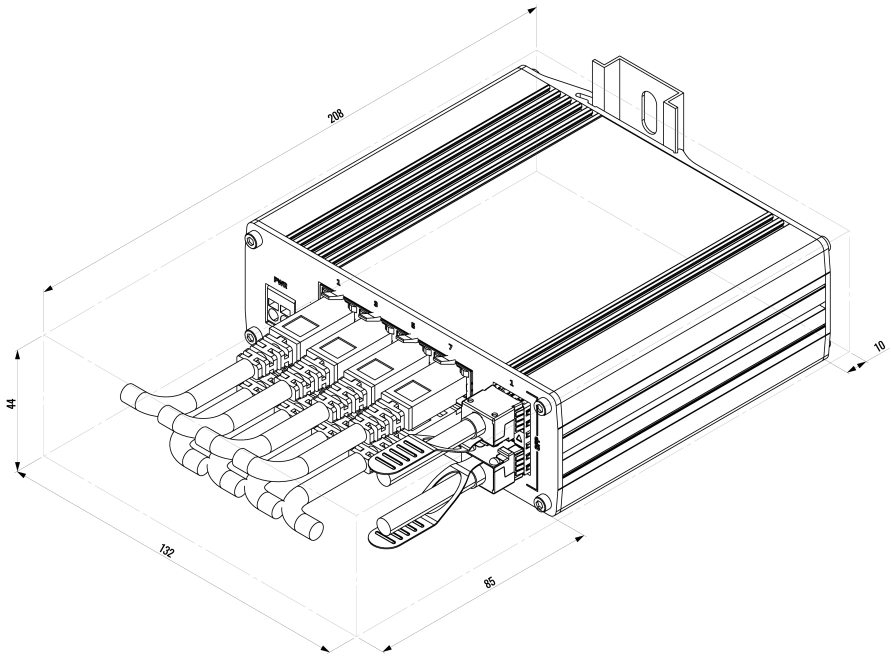

Copyright © 2026, UAB TELTONIKA NETWORKS.
Specifications and information provided in this document are subject to change by UAB TELTONIKA NETWORKS without prior notice.
millbeck.co.uk

Millbeck.

ABOUT

Millbeck brings over 20 years of connectivity expertise, delivering smart, secure IoT solutions that scale seamlessly, from UK based projects to global deployments.

As a Teltonika Diamond Partner, we combine global IoT SIM coverage, industrial-grade hardware, and expert support to deliver scalable, future-ready systems tailored to your exact needs.

TIMELINE

2002 — MILLBECK FOUNDED
Founded to provide data solutions to SMEs

2008 — FIRST IOT SIM SOLUTION PROVIDED
Cellular SIM solutions commence

2018 — ROAMING IOT SIMS LAUNCHED
The next step in IoT connectivity begins

2024 — TELTONIKA DIAMOND PARTNER
Millbeck solidify position as a key Teltonika partner

2025 — 5000+ CUSTOMERS CONNECTED
Continued growth in IoT Connectivity

EXPERTISE

- Routers
- Antennas
- Networking
- IoT SIMs
- IoT Consultancy

SIM TECHNOLOGIES

- 2G/3G, 4G LTE, 5G, CAT-M1, LTE-M, VoLTE & NB-IoT
- eUICC
- eSIM
- Fixed Public IP
- Fixed Private IP
- IPSec VPN
- SSL VPN

sales@millbeck.co.uk - 0113 548 0770 - millbeck.co.uk

Millbeck.

Industry sectors we connect

- Agriculture
- Construction
- BMS & Smart Cities
- Energy & Utilities
- Healthcare
- EV Charging
- Industrial IoT
- Retail & Point of Sale
- Security
- Automotive & Logistics

sales@millbeck.co.uk - 0113 548 0770 - millbeck.co.uk

Millbeck.

SIM & Hardware vendors

TELTONIKA

PROroute

2J antennas

PANORAMA ANTENNAS

POYNTING

DrayTek

QuWireless

OV

kpn IoT

EE

vodafone

O2

sales@millbeck.co.uk – 0113 548 0770 – millbeck.co.uk

Millbeck.



sales@millbeck.co.uk – 0113 548 0770 – millbeck.co.uk