TSW030

8-port Ethernet Switch



Energy & utilities

Enterprise

Industrial & automation

Retail

Smart city

2-PIN POWER INPUT

Simple and suitable for industrial applications

LOW POWER CONSUMPTION

Up to 0.5 W when idle, up to 1.5 W maximum

INTEGRATED DIN RAIL

Easy mounting for plug-and-play deployment

8 X RJ45 PORTS

Eight 10/100 Mbps Ethernet ports

Copyright © 2026, UAB TELTONIKA NETWORKS.
Specifications and information provided in this document are subject to change by UAB TELTONIKA NETWORKS without prior notice.

millbeck.co.uk

INDUSTRIAL PROTOCOLS	
Profinet	Profinet Class A conformance (available with optional order code)
Ethernet	
Ethernet	8 x ETH ports, 10/100 Mbps, supports auto MDI/MDIX crossover
IEEE 802.3 series standards	802.3i, 802.3u, 802.3ab, 802.3x, 802.3az
Power	
Connector	2-pin industrial DC power socket
Input voltage range	7 – 57 VDC, overvoltage protection: 60Vmax, reverse polarity protection: 80Vmax, surge protection: min 64.4V/max 71.2V breakdown voltage, 93.6V maximum reverse voltage @4.3A maximum reverse surge current, 1- Vin, 2-PGND
Power consumption	Idle: 0.5 W / Max: 1.5 W
Physical Interfaces	
Ethernet	8 x RJ45 ports, 10/100 Mbps
Status LEDs	1 x Power LED, 16 x ETH status LEDs
Power	1 x 2-pin industrial DC power socket
Other	1 x Grounding screw
Physical Specification	
Casing material	Anodised aluminium housing and panels
Dimensions (W x H x D)	113.1 x 41.2 x 74.6 mm
Weight	256 g
Mounting options	Integrated DIN rail bracket; wall mount and flat surface (additional kit needed)
Operating Environment	
Operating temperature	-40 °C to 75 °C
Operating humidity	5% to 95% non-condensing
Ingress Protection Rating	IP30
Performance Specifications	
Bandwidth (Non-blocking)	20 Gbps
Packer buffer	128 KB
MAC address table size	2K entries
Jumbo frame support	9216 bytes

Copyright © 2026, UAB TELTONIKA NETWORKS.
Specifications and information provided in this document are subject to change by UAB TELTONIKA NETWORKS without prior notice.

millbeck.co.uk

Certification

EMEA	TSW030 CE TSW030 UKCA TSW030 RoHS TSW030 REACH TSW030 ANRT
APAC	TSW030 RCM TSW030 MTCTE
AMERICAS	TSW030 FCC TSW030 IC(ISED) TSW030 UL/CSA Safety TSW030 NOM
MISCELLANEOUS	TSW030 UN ECE R10 TSW030 UN ECE R118 TSW030 CB Scheme
SAFETY & ENVIROINMENTAL	TSW030 WEEE

Copyright © 2026, UAB TELTONIKA NETWORKS.
Specifications and information provided in this document are subject to change by UAB TELTONIKA NETWORKS without prior notice.

millbeck.co.uk

Hardware

FRONT VIEW

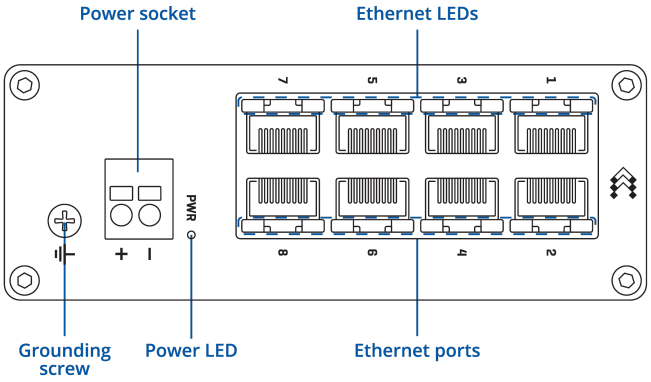

BACK VIEW

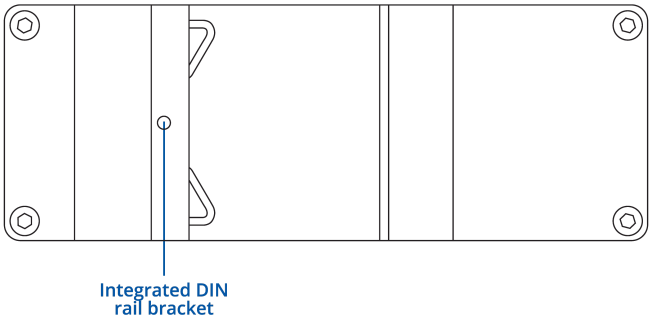

RJ45 LED MEANING



POWER SOCKET PINOUT

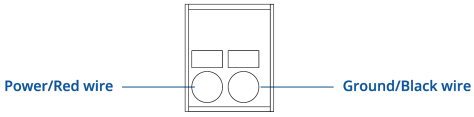

Copyright © 2026, UAB TELTONIKA NETWORKS.
Specifications and information provided in this document are subject to change by UAB TELTONIKA NETWORKS without prior notice.

millbeck.co.uk

Ordering

Standard package*



TSW030



QUICK START GUIDE

*Standard package contents may differ based on standard order codes.

For more information on all available packaging options – please contact us directly.

Copyright © 2026, UAB TELTONIKA NETWORKS.
Specifications and information provided in this document are subject to change by UAB TELTONIKA NETWORKS without prior notice.

millbeck.co.uk

Classification codes

HS Code: 851762
HTS: 8517.62.00

For more information on all available packaging options – please contact us directly.

Available versions

Hardware version	Supported frequencies	Standard order code / Package Contains
TSW030 *****0	N/A	TSW030000000 / Standard package without PSU
TSW030 *****1 **Profinet Class A conformance**	N/A	TSW030000001 / Standard package without PSU

TSW030 spatial measurements

Available versions	
Device housing (W x H x D)*	74.6 x 41.2 x 113.1 mm
Box (W x H x D):	79.5 × 45.7 × 118.5 mm
	*Housing measurements are presented without antenna connectors and screws; for measurements of other device elements look to the sections below

Copyright © 2026, UAB TELTONIKA NETWORKS.
Specifications and information provided in this document are subject to change by UAB TELTONIKA NETWORKS without prior notice.

millbeck.co.uk

FRONT VIEW

The figure below depicts the measurements of device and its components as seen from the front panel side:

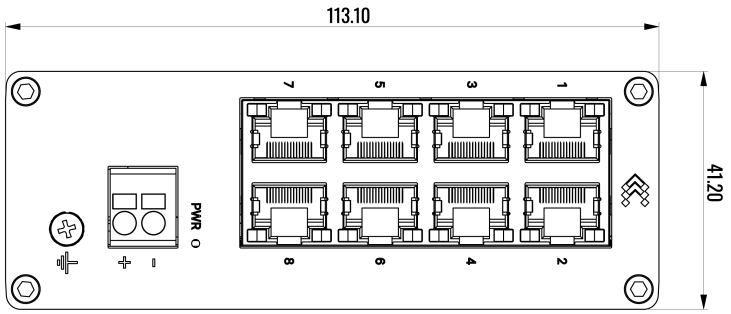

REAR VIEW

The figure below depicts the measurements of device and its components as seen from the back panel side:

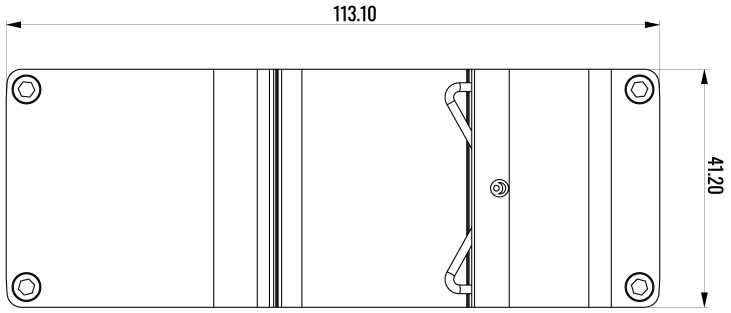

LEFT VIEW

The figure below depicts the measurements of device and its components as seen from the left:

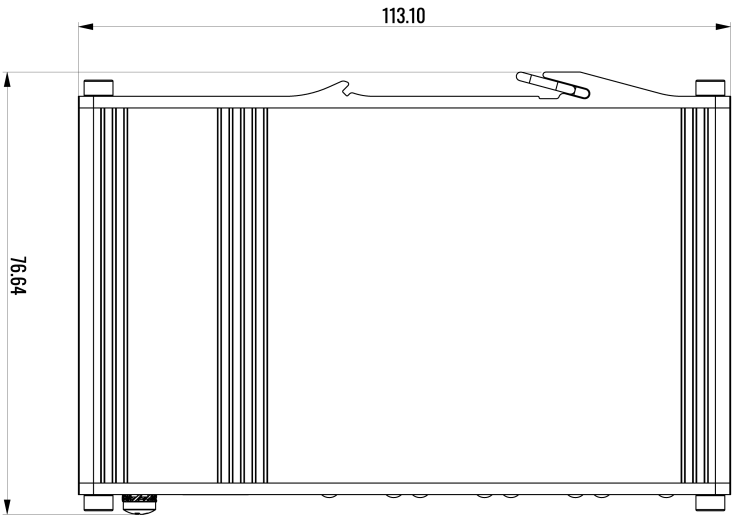

Copyright © 2026, UAB TELTONIKA NETWORKS.
Specifications and information provided in this document are subject to change by UAB TELTONIKA NETWORKS without prior notice.

millbeck.co.uk

RIGHT VIEW

The figure below depicts the measurements of device and its components as seen from the right:

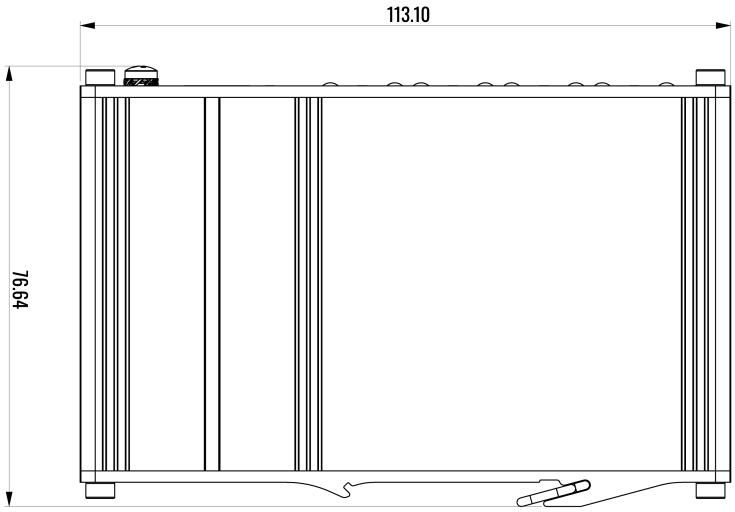

MOUNTING SPACE REQUIREMENTS

The figure below depicts an approximation of the device's dimensions when cables and antennas are attached:

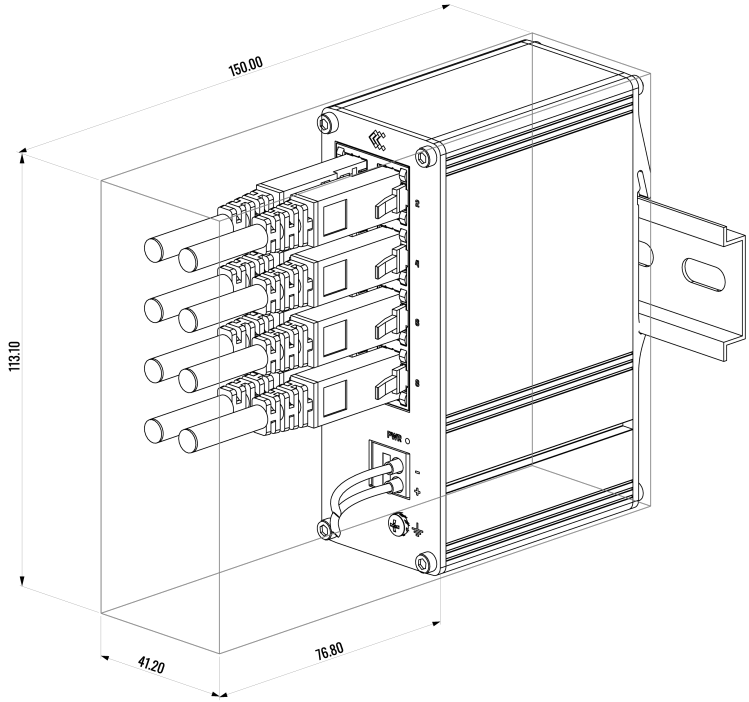

Copyright © 2026, UAB TELTONIKA NETWORKS.
Specifications and information provided in this document are subject to change by UAB TELTONIKA NETWORKS without prior notice.

millbeck.co.uk

Millbeck.

ABOUT

Millbeck brings over 20 years of connectivity expertise, delivering smart, secure IoT solutions that scale seamlessly, from UK based projects to global deployments.

As a Teltonika Diamond Partner, we combine global IoT SIM coverage, industrial-grade hardware, and expert support to deliver scalable, future-ready systems tailored to your exact needs.

TIMELINE

2002 — MILLBECK FOUNDED
Founded to provide data solutions to SMEs

2008 — FIRST IOT SIM SOLUTION PROVIDED
Cellular SIM solutions commence

2018 — ROAMING IOT SIMS LAUNCHED
The next step in IoT connectivity begins

2024 — TELTONIKA DIAMOND PARTNER
Millbeck solidify position as a key Teltonika partner

2025 — 5000+ CUSTOMERS CONNECTED
Continued growth in IoT Connectivity

EXPERTISE

- Routers
- Antennas
- Networking
- IoT SIMs
- IoT Consultancy

SIM TECHNOLOGIES

- 2G/3G, 4G LTE, 5G, CAT-M1, LTE-M, VoLTE & NB-IoT
- eUICC
- eSIM
- Fixed Public IP
- Fixed Private IP
- IPSec VPN
- SSL VPN

sales@millbeck.co.uk - 0113 548 0770 - millbeck.co.uk

Millbeck.

Industry sectors we connect

- Agriculture
- Construction
- BMS & Smart Cities
- Energy & Utilities
- Healthcare
- EV Charging
- Industrial IoT
- Retail & Point of Sale
- Security
- Automotive & Logistics

sales@millbeck.co.uk - 0113 548 0770 - millbeck.co.uk

Millbeck.

SIM & Hardware vendors

TELTONIKA

PROroute

2J antennas

PANORAMA ANTENNAS

POYNTING

DrayTek

QuWireless

OV

kpn IoT

EE

vodafone

O2

sales@millbeck.co.uk – 0113 548 0770 – millbeck.co.uk

Millbeck.



sales@millbeck.co.uk – 0113 548 0770 – millbeck.co.uk