TSF000

LOW PROFILE POE+ SWITCH



Retail

Smart city

Energy & utilities

Industrial & automation

POWER & CONNECT WITH POE+

Deliver power and data for up to 4 devices with 120W power budget

LOW-PROFILE INDUSTRIAL FIT

Flat housing with DIN rail mount for effortless installation

5 X ETHERNET

Front access Ethernet with extremely compact form factor

FLEXIBLE POWER INPUT

7 – 57 VDC for compatibility with diverse industrial systems

Copyright © 2026, UAB TELTONIKA NETWORKS.
Specifications and information provided in this document are subject to change by UAB TELTONIKA NETWORKS without prior notice.

millbeck.co.uk

INDUSTRIAL PROTOCOLS	
Profinet	Profinet Class A conformance (available with optional order code)

Ethernet	
Ethernet	5 x ETH ports, 10/100 Mbps, supports auto MDI/MDIX crossover
IEEE 802.3 series standards	802.3i, 802.3u, 802.3x, 802.3az, 802.3p 802.3Q

POE OUT	
PoE ports	Port 1- 4
PoE standards	IEEE 802.3af (PoE, Type 1) and IEEE 802.3at (PoE+, Type 2), Alternative A
PoE Max Power per Port (at PSE)	30 W
Total PoE Power Budget (at PSE)	120 W

Power	
Connector	3-pin industrial DC power socket
Input voltage range	7 – 57 VDC, overvoltage protection: 60 Vmax, reverse polarity protection: 80 Vmax, surge protection: min 64.4V/max 71.2V breakdown voltage, 93.6V maximum reverse voltage @4.3A maximum reverse surge current
PoE-Out input voltage range	44 - 57 VDC
Power consumption	Idle: 1 W / Max: 1.5 W / PoE Max: 121 W

Physical Interfaces	
Ethernet	5 x RJ45 ports, 10/100 Mbps
Status LEDs	1 x Power LED, 10 x ETH status LEDs
Power	1 x 3-pin industrial DC power socket
Grounding	Grounding terminal on power connector

Physical Specification	
Casing material	Anodised aluminium housing and panels
Dimensions (W x H x D)	113 x 28 x 50 mm
Weight	142 g
Mounting options	Integrated DIN rail bracket

Copyright © 2026, UAB TELTONIKA NETWORKS.
Specifications and information provided in this document are subject to change by UAB TELTONIKA NETWORKS without prior notice.

millbeck.co.uk

Operating Environment	
Operating temperature	-40 °C to 75 °C
Operating humidity	5% to 95% non-condensing
Ingress Protection Rating	IP30

Performance Specifications	
Bandwidth (Non-blocking)	10 Gbps
Packer buffer	128 KB
MAC address table size	2K entries
Jumbo frame support	9216 bytes

Copyright © 2026, UAB TELTONIKA NETWORKS.
Specifications and information provided in this document are subject to change by UAB TELTONIKA NETWORKS without prior notice.

millbeck.co.uk

Certification

EMEA	TSF000 CE TSF000 UKCA TSF000 RoHS TSF000 REACH
APAC	TSF000 RCM
AMERICAS	TSF000 FCC TSF000 IC(ISED) TSF000 UL/CSA Safety
MISCELLANEOUS	TSF000 CB Scheme
SAFETY & ENVIROINMENTAL	TSF000 WEEE

Copyright © 2026, UAB TELTONIKA NETWORKS.
Specifications and information provided in this document are subject to change by UAB TELTONIKA NETWORKS without prior notice.

millbeck.co.uk

Hardware

FRONT VIEW

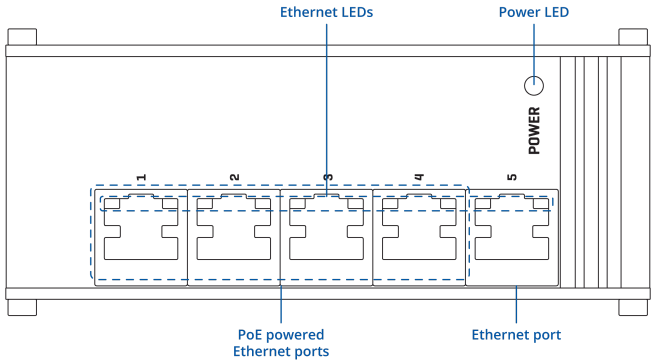

BACK VIEW

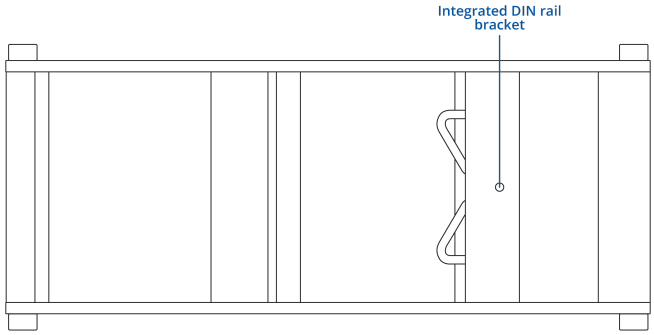

RJ45 LED MEANING



POWER CONNECTOR

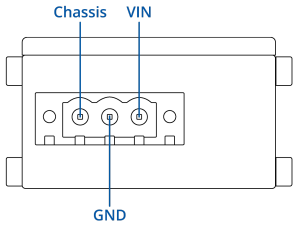

Copyright © 2026, UAB TELTONIKA NETWORKS.
Specifications and information provided in this document are subject to change by UAB TELTONIKA NETWORKS without prior notice.

millbeck.co.uk

Ordering

Standard package*



3-PIN POWER CONNECTOR



TSF000



QUICK START GUIDE

*Standard package contents may differ based on standard order codes.

For more information on all available packaging options – please contact us directly.

Copyright © 2026, UAB TELTONIKA NETWORKS.
Specifications and information provided in this document are subject to change by UAB TELTONIKA NETWORKS without prior notice.

millbeck.co.uk

Classification codes

HS Code: 851762
HTS: 8517.62.00

For more information on all available packaging options – please contact us directly.

Available versions

Hardware version	Supported frequencies	Standard order code / Package Contains
TSF000 *****0	N/A	TSF000000000 / Standard package without PSU
TSF000 *****1 **Profinet Class A conformance**	N/A	TSF000000001 / Standard package without PSU

TSF000 spatial measurements

Available versions	
Box (W x H x D):	113 x 28 x 50 mm
Device housing (W x H x D)*	140 x 32 x 55 mm
	*Housing measurements are presented without antenna connectors and screws; for measurements of other device elements look to the sections below

Copyright © 2026, UAB TELTONIKA NETWORKS.
Specifications and information provided in this document are subject to change by UAB TELTONIKA NETWORKS without prior notice.

millbeck.co.uk

TOP VIEW

The figure below depicts the measurements of device and its components as seen from the top:

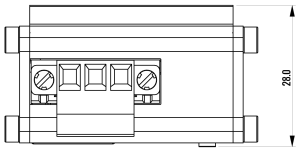

FRONT VIEW

The figure below depicts the measurements of device and its components as seen from the front panel side:

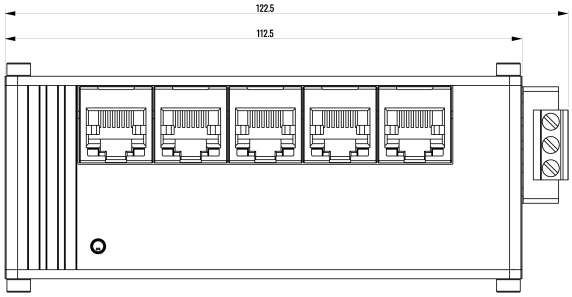

REAR VIEW

The figure below depicts the measurements of device and its components as seen from the back panel side:

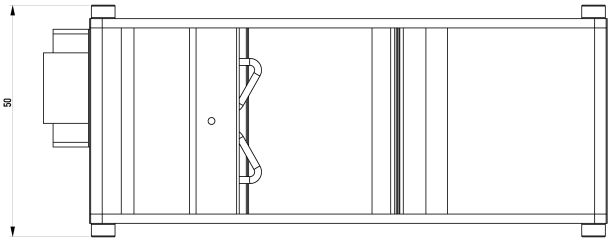

LEFT VIEW

The figure below depicts the measurements of device and its components as seen from the left:

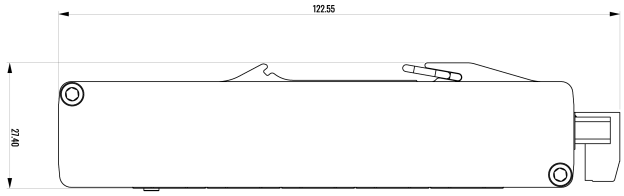

Copyright © 2026, UAB TELTONIKA NETWORKS.
Specifications and information provided in this document are subject to change by UAB TELTONIKA NETWORKS without prior notice.

millbeck.co.uk

MOUNTING SPACE REQUIREMENTS

The figure below depicts an approximation of the device's dimensions when cables and antennas are attached:

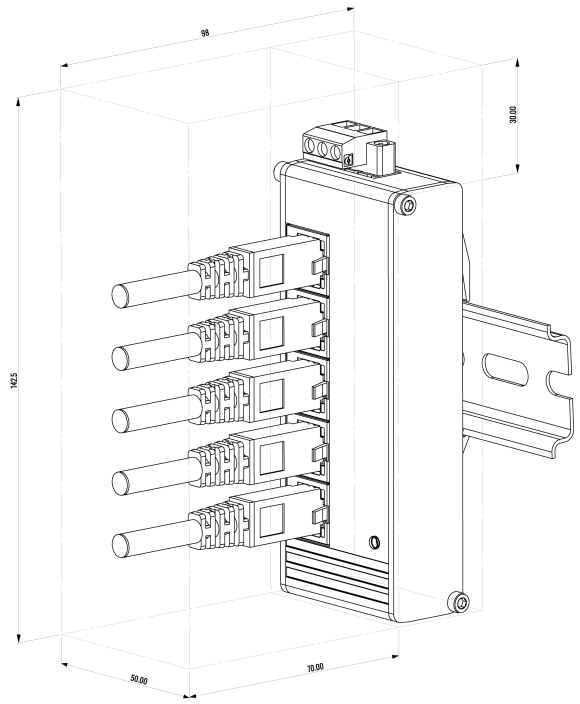

Copyright © 2026, UAB TELTONIKA NETWORKS.
Specifications and information provided in this document are subject to change by UAB TELTONIKA NETWORKS without prior notice.

millbeck.co.uk

Millbeck.

ABOUT

Millbeck brings over 20 years of connectivity expertise, delivering smart, secure IoT solutions that scale seamlessly, from UK based projects to global deployments.

As a Teltonika Diamond Partner, we combine global IoT SIM coverage, industrial-grade hardware, and expert support to deliver scalable, future-ready systems tailored to your exact needs.

TIMELINE

2002 — MILLBECK FOUNDED
Founded to provide data solutions to SMEs

2008 — FIRST IOT SIM SOLUTION PROVIDED
Cellular SIM solutions commence

2018 — ROAMING IOT SIMS LAUNCHED
The next step in IoT connectivity begins

2024 — TELTONIKA DIAMOND PARTNER
Millbeck solidify position as a key Teltonika partner

2025 — 5000+ CUSTOMERS CONNECTED
Continued growth in IoT Connectivity

EXPERTISE

- Routers
- Antennas
- Networking
- IoT SIMs
- IoT Consultancy

SIM TECHNOLOGIES

- 2G/3G, 4G LTE, 5G, CAT-M1, LTE-M, VoLTE & NB-IoT
- eUICC
- eSIM
- Fixed Public IP
- Fixed Private IP
- IPSec VPN
- SSL VPN

sales@millbeck.co.uk - 0113 548 0770 - millbeck.co.uk

Millbeck.

Industry sectors we connect

- Agriculture
- Construction
- BMS & Smart Cities
- Energy & Utilities
- Healthcare
- EV Charging
- Industrial IoT
- Retail & Point of Sale
- Security
- Automotive & Logistics

sales@millbeck.co.uk - 0113 548 0770 - millbeck.co.uk

Millbeck.

SIM & Hardware vendors

TELTONIKA

PROroute

2J antennas

PANORAMA ANTENNAS

POYNTING

DrayTek

QuWireless

OV

kpn IoT

EE

vodafone

O2

sales@millbeck.co.uk – 0113 548 0770 – millbeck.co.uk

Millbeck.



sales@millbeck.co.uk – 0113 548 0770 – millbeck.co.uk