TSF010

FLAT ETHERNET SWITCH



Energy & utilities

Enterprise

Industrial & automation

Retail

Smart city

3-PIN POWER INPUT

Flexible and tailor-made for industrial use

FLAT & COMPACT

Flat and compact design weighing only 142 g

INTEGRATED DIN RAIL BRACKET

Easy mounting for plug-and-play deployment

9-57 VDC

Suitable voltage range for industrial applications

Copyright © 2026, UAB TELTONIKA NETWORKS.
Specifications and information provided in this document are subject to change by UAB TELTONIKA NETWORKS without prior notice.

millbeck.co.uk

INDUSTRIAL PROTOCOLS	
Profinet	Profinet Class A conformance (available with optional order code)
Ethernet	
Ethernet	5 x ETH ports, 10/100 Mbps, supports auto MDI/MDIX crossover
IEEE 802.3 series standards	802.3i, 802.3u, 802.3ab, 802.3x, 802.3az
Power	
Connector	3-pin industrial DC power socket
Input voltage range	9 – 57 VDC, overvoltage protection: 60 Vmax, reverse polarity protection: 80 Vmax, surge protection: min 64.4V/max 71.2V breakdown voltage, 93.6V maximum reverse voltage @4.3A maximum reverse surge current
Input voltage range*	12-40 VAC (50/60Hz)
	*Feature availability varies by order code
Power consumption	Idle: 1 W / Max: 1.5 W
Physical Interfaces	
Ethernet	5 x RJ45 ports, 10/100 Mbps
Status LEDs	1 x Power LED, 10 x ETH status LEDs
Power	1 x 3-pin industrial DC power socket
Grounding	Grounding terminal on power connector
Physical Specification	
Casing material	Anodised aluminium housing and panels
Dimensions (W x H x D)	113 x 28 x 50 mm
Weight	142 g
Mounting options	Integrated DIN rail bracket
Operating Environment	
Operating temperature	-40 °C to 75 °C
Operating humidity	5% to 95% non-condensing
Ingress Protection Rating	IP30

Copyright © 2026, UAB TELTONIKA NETWORKS.
Specifications and information provided in this document are subject to change by UAB TELTONIKA NETWORKS without prior notice.

millbeck.co.uk

Performance Specifications

Bandwidth (Non-blocking)	10 Gbps
Packer buffer	128 KB
MAC address table size	2K entries
Jumbo frame support	9216 bytes

Copyright © 2026, UAB TELTONIKA NETWORKS.
Specifications and information provided in this document are subject to change by UAB TELTONIKA NETWORKS without prior notice.

millbeck.co.uk

Certification

EMEA	TSF010 CE TSF010 UKCA TSF010 RoHS TSF010 REACH TSF010 ANRT
APAC	TSF010 RCM TSF010 MTCTE
AMERICAS	TSF010 FCC TSF010 IC(ISED) TSF010 UL/CSA Safety
MISCELLANEOUS	TSF010 CB Scheme
SAFETY & ENVIROINMENTAL	TSF010 WEEE

Copyright © 2026, UAB TELTONIKA NETWORKS.
Specifications and information provided in this document are subject to change by UAB TELTONIKA NETWORKS without prior notice.

millbeck.co.uk

Hardware

FRONT VIEW

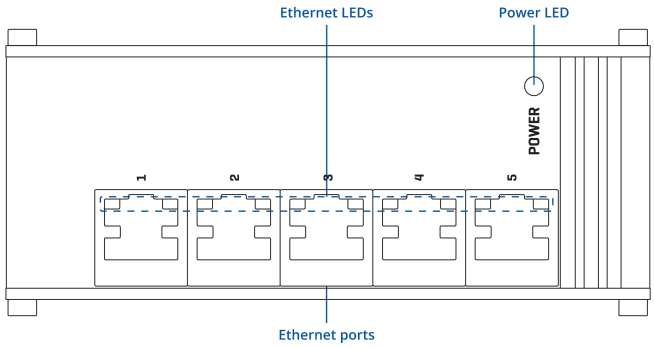

BACK VIEW

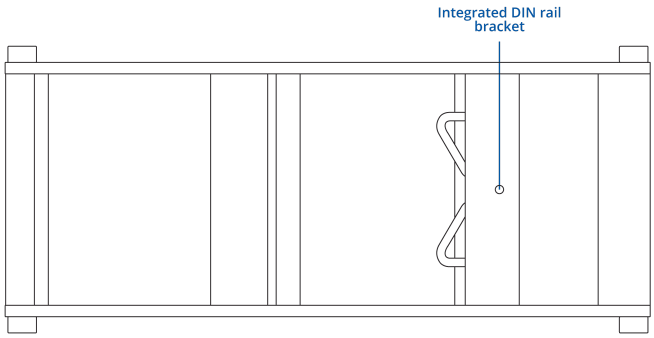

RJ45 LED MEANING



POWER SOCKET PINOUT

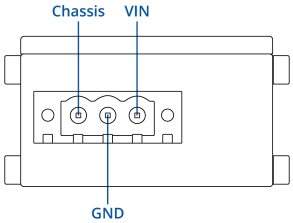

Copyright © 2026, UAB TELTONIKA NETWORKS.
Specifications and information provided in this document are subject to change by UAB TELTONIKA NETWORKS without prior notice.

millbeck.co.uk

Ordering

Standard package*



TSF010



QUICK START GUIDE



3-PIN POWER CONNECTOR

*Standard package contents may differ based on standard order codes.

For more information on all available packaging options – please contact us directly.

Copyright © 2026, UAB TELTONIKA NETWORKS.
Specifications and information provided in this document are subject to change by UAB TELTONIKA NETWORKS without prior notice.

millbeck.co.uk

Classification codes

HS Code: 851762
HTS: 8517.62.00

For more information on all available packaging options – please contact us directly.

Available versions

Hardware version	Supported frequencies	Standard order code / Package Contains
TSF010 ***1*****0** **Input voltage range: 9 – 57 VDC and 12-40 VAC (50/60Hz)**	N/A	TSF010010000 / Standard package without PSU
TSF010 ***1*****1** **Profinet Class A conformance Input voltage range: 9 – 57 VDC and 12-40 VAC (50/60Hz)**	N/A	TSF010010001 / Standard package without PSU

TSF010 spatial measurements

Available versions	
Device housing (W x H x D)	113 x 28 x 50 mm
Box (W x H x D):	140 x 32 x 56 mm

Copyright © 2026, UAB TELTONIKA NETWORKS.
Specifications and information provided in this document are subject to change by UAB TELTONIKA NETWORKS without prior notice.

millbeck.co.uk

TOP VIEW

The figure below depicts the measurements of device and its components as seen from the top:

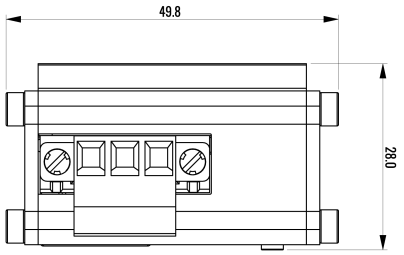

RIGHT VIEW

The figure below depicts the measurements of device and its components as seen from the right:

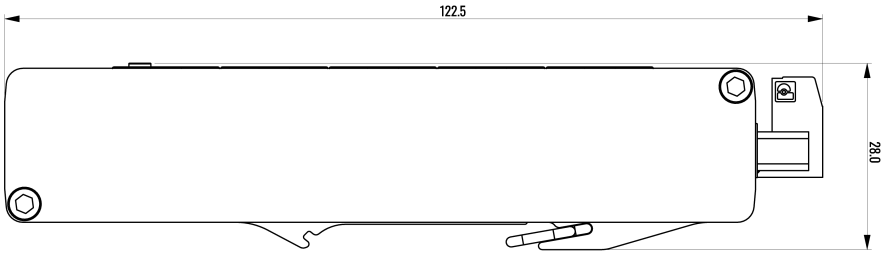

FRONT VIEW

The figure below depicts the measurements of device and its components as seen from the front panel side:

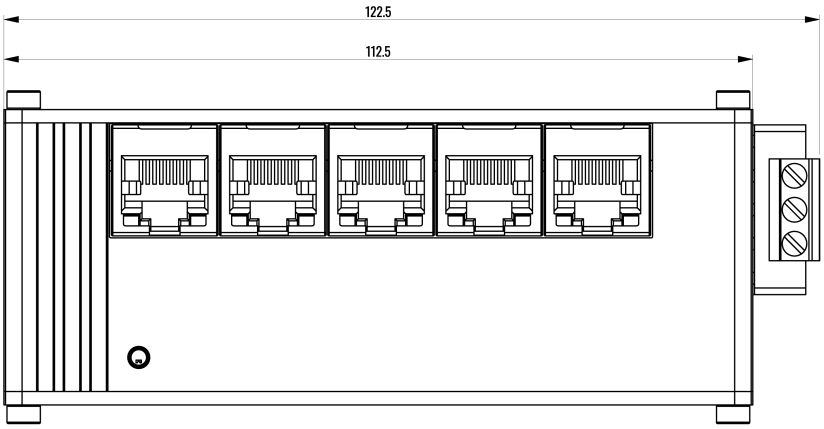

Copyright © 2026, UAB TELTONIKA NETWORKS.
Specifications and information provided in this document are subject to change by UAB TELTONIKA NETWORKS without prior notice.

millbeck.co.uk

REAR VIEW

The figure below depicts the measurements of device and its components as seen from the back panel side:

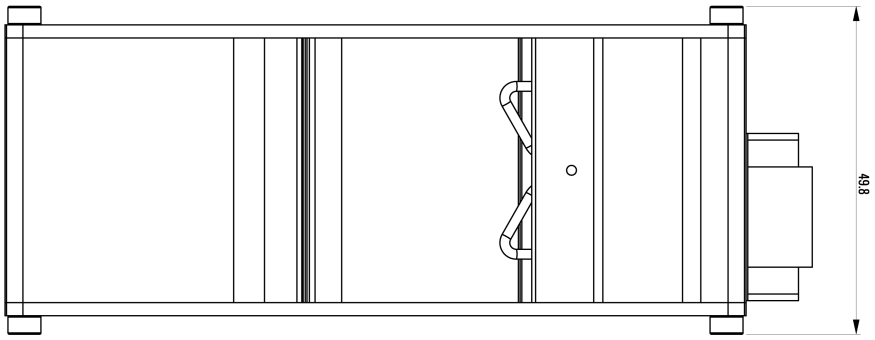

MOUNTING SPACE REQUIREMENTS

The figure below depicts an approximation of the device's dimensions when cables and antennas are attached:

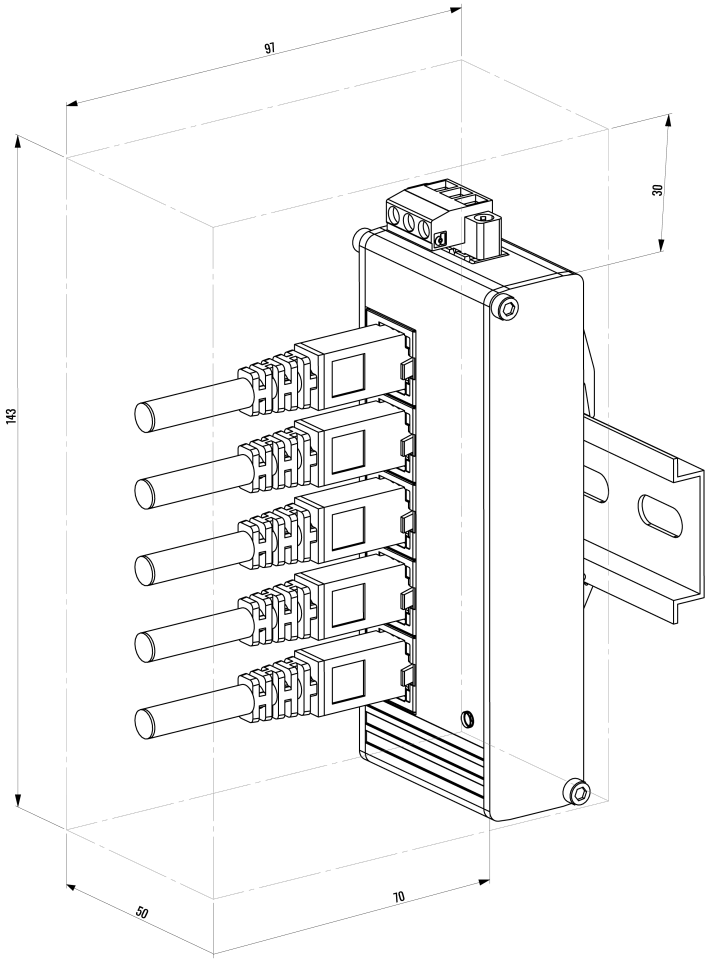

Copyright © 2026, UAB TELTONIKA NETWORKS.
Specifications and information provided in this document are subject to change by UAB TELTONIKA NETWORKS without prior notice.

millbeck.co.uk

Millbeck.

ABOUT

Millbeck brings over 20 years of connectivity expertise, delivering smart, secure IoT solutions that scale seamlessly, from UK based projects to global deployments.

As a Teltonika Diamond Partner, we combine global IoT SIM coverage, industrial-grade hardware, and expert support to deliver scalable, future-ready systems tailored to your exact needs.

TIMELINE

2002 — MILLBECK FOUNDED
Founded to provide data solutions to SMEs

2008 — FIRST IOT SIM SOLUTION PROVIDED
Cellular SIM solutions commence

2018 — ROAMING IOT SIMS LAUNCHED
The next step in IoT connectivity begins

2024 — TELTONIKA DIAMOND PARTNER
Millbeck solidify position as a key Teltonika partner

2025 — 5000+ CUSTOMERS CONNECTED
Continued growth in IoT Connectivity

EXPERTISE

- Routers
- Antennas
- Networking
- IoT SIMs
- IoT Consultancy

SIM TECHNOLOGIES

- 2G/3G, 4G LTE, 5G, CAT-M1, LTE-M, VoLTE & NB-IoT
- eUICC
- eSIM
- Fixed Public IP
- Fixed Private IP
- IPSec VPN
- SSL VPN

sales@millbeck.co.uk - 0113 548 0770 - millbeck.co.uk

Millbeck.

Industry sectors we connect

- Agriculture
- Construction
- BMS & Smart Cities
- Energy & Utilities
- Healthcare
- EV Charging
- Industrial IoT
- Retail & Point of Sale
- Security
- Automotive & Logistics

sales@millbeck.co.uk - 0113 548 0770 - millbeck.co.uk

Millbeck.

SIM & Hardware vendors

TELTONIKA

PROroute

2J antennas

PANORAMA ANTENNAS

POYNTING

DrayTek

QuWireless

OV

kpn IoT

EE

vodafone

O2

sales@millbeck.co.uk – 0113 548 0770 – millbeck.co.uk

Millbeck.



sales@millbeck.co.uk – 0113 548 0770 – millbeck.co.uk