TSW304

DIN RAIL ETHERNET SWITCH



Energy & utilities

Enterprise

Industrial & automation

Retail

Smart city

MOUNTING

Integrated DIN rail bracket

COMPACT

102 x 25 x 81.5 mm

GIGABIT ETHERNET

4 x Gigabit Ethernet with speeds of up to 1000 Mbps

7-57 VDC / 9-40 VAC

Wide range of supported power supply voltages

Copyright © 2026, UAB TELTONIKA NETWORKS.
Specifications and information provided in this document are subject to change by UAB TELTONIKA NETWORKS without prior notice.

millbeck.co.uk

INDUSTRIAL PROTOCOLS	
Profinet	Profinet Class A conformance (available with optional order code)

Ethernet	
ETH	4 x ETH ports, 10/100/1000 Mbps, supports auto MDI/MDIX crossover
IEEE 802.3 series standards	802.3i, 802.3u, 802.3ab, 802.3x, 802.3az

Power	
Connector	2-pin industrial DC power socket
Input voltage range	7 - 57 VDC; 9 - 40 VAC
PoE (passive)	Possibility to power up through ETH1 ports, not compatible with IEEE802.3af, 802.3at and 802.3bt standards, Mode B, 9 - 30 VDC
Power consumption	Idle: 0.26 W / Max: 1.44 W

Physical Interfaces	
Ethernet	4 x RJ45 ports, 10/100/1000 Mbps
Status LEDs	8 x ETH status LEDs, 1 x Power LED
Power	1 x 2-pin industrial DC power socket
Other	1 x Grounding screw

Physical Specification	
Casing material	Anodised aluminium housing and panels
Dimensions (W x H x D)	102 x 25 x 81.5 mm
Weight	210 g
Mounting options	Integrated DIN rail bracket; wall mount and flat surface (additional kit needed)

Operating Environment	
Operating temperature	-40 °C to 75 °C
Operating humidity	5% to 95% non-condensing
Ingress Protection Rating	IP30

Performance Specifications	
Bandwidth (Non-blocking)	8 Gbps
Packer buffer	128 KB
MAC address table size	2K entries
Jumbo frame support	9216 bytes

Copyright © 2026, UAB TELTONIKA NETWORKS.
Specifications and information provided in this document are subject to change by UAB TELTONIKA NETWORKS without prior notice.

millbeck.co.uk

Certification

EMEA	TSW304 CE TSW304 UKCA TSW304 EAC TSW304 RoHS TSW304 REACH TSW304 CITC TSW304 Kenya TSW304 ANRT
APAC	TSW304 RCM
AMERICAS	TSW304 FCC TSW304 IC(ISED) TSW304 NOM
MISCELLANEOUS	TSW304 CB Scheme
SAFETY & ENVIROINMENTAL	TSW304 WEEE

Copyright © 2026, UAB TELTONIKA NETWORKS.
Specifications and information provided in this document are subject to change by UAB TELTONIKA NETWORKS without prior notice.

millbeck.co.uk

Hardware

FRONT VIEW

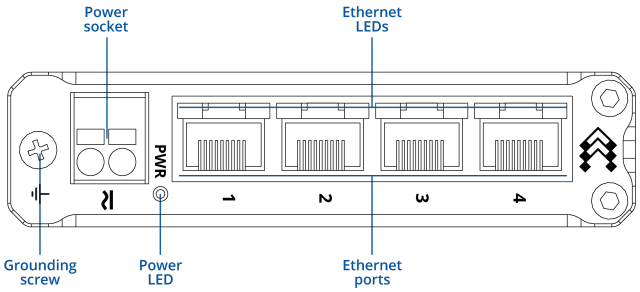

BACK VIEW

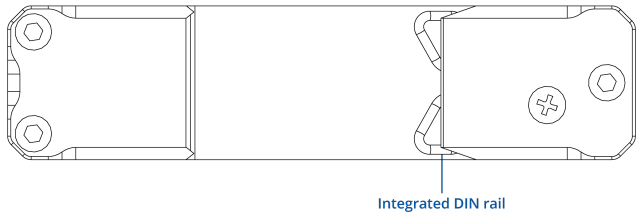

RJ45 LED MEANING

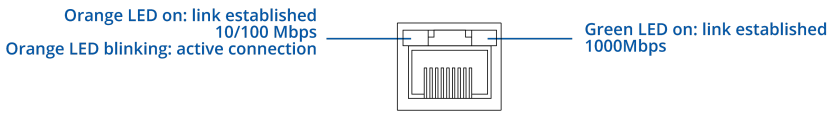

POWER SOCKET PINOUT

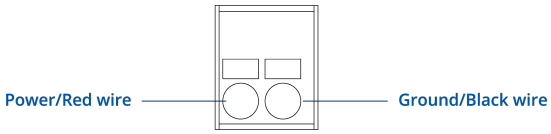

Copyright © 2026, UAB TELTONIKA NETWORKS.
Specifications and information provided in this document are subject to change by UAB TELTONIKA NETWORKS without prior notice.

millbeck.co.uk

Ordering

Standard package*



TSW304



QUICK START GUIDE

*Standard package contents may differ based on standard order codes.

For more information on all available packaging options – please contact us directly.

Copyright © 2026, UAB TELTONIKA NETWORKS.
Specifications and information provided in this document are subject to change by UAB TELTONIKA NETWORKS without prior notice.

millbeck.co.uk

Classification codes

HS Code: 851762
HTS: 8517.62.00

For more information on all available packaging options – please contact us directly.

Available versions

Hardware version	Supported frequencies	Standard order code / Package Contains
TSW304 *****0	N/A	TSW304000010 / Standard package withouth PSU
TSW304 *****1 **Profinet Class A conformance**	N/A	TSW304000001 / Standard package without PSU

Copyright © 2026, UAB TELTONIKA NETWORKS.
Specifications and information provided in this document are subject to change by UAB TELTONIKA NETWORKS without prior notice.

millbeck.co.uk

TOP VIEW

The figure below depicts the measurements of device and its components as seen from the top:

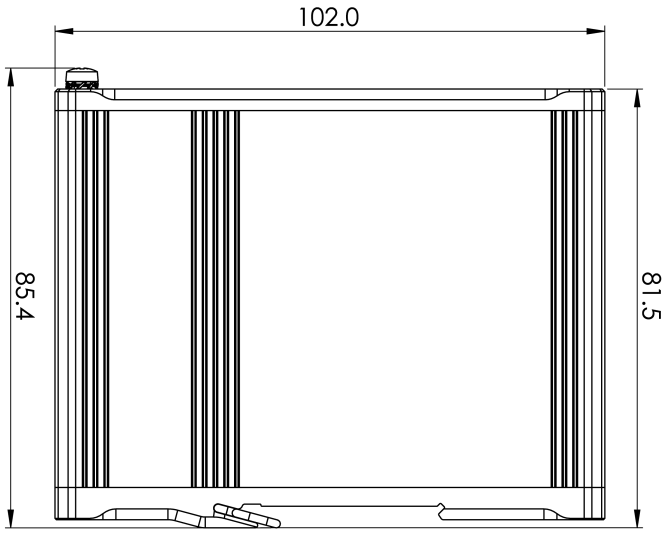

RIGHT VIEW

The figure below depicts the measurements of device and its components as seen from the right side:

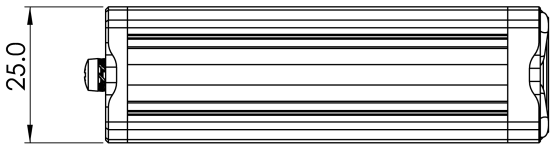

FRONT VIEW

The figure below depicts the measurements of device and its components as seen from the front panel side:

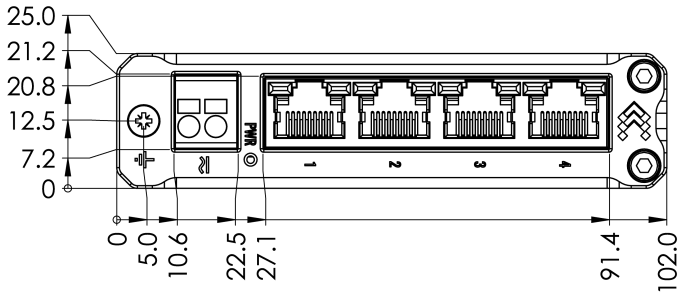

Copyright © 2026, UAB TELTONIKA NETWORKS.
Specifications and information provided in this document are subject to change by UAB TELTONIKA NETWORKS without prior notice.

millbeck.co.uk

REAR VIEW

The figure below depicts the measurements of device and its components as seen from the back panel side:

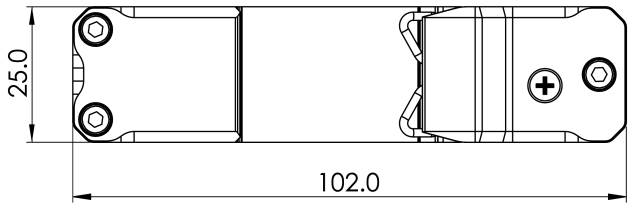

MOUNTING SPACE REQUIREMENTS

The figure below depicts an approximation of the device's dimensions when cables and antennas are attached:

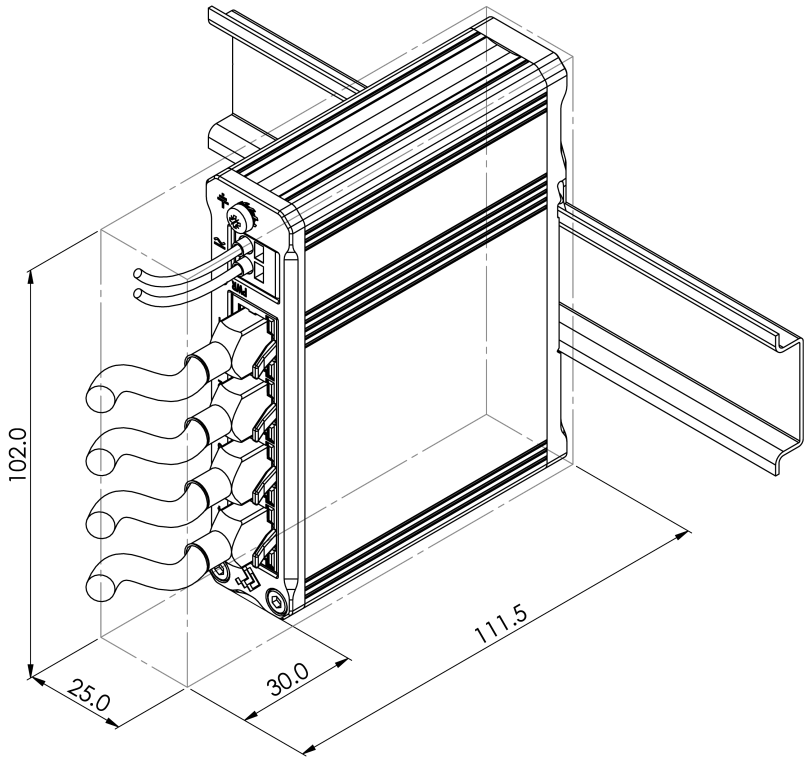

Copyright © 2026, UAB TELTONIKA NETWORKS.
Specifications and information provided in this document are subject to change by UAB TELTONIKA NETWORKS without prior notice.

millbeck.co.uk

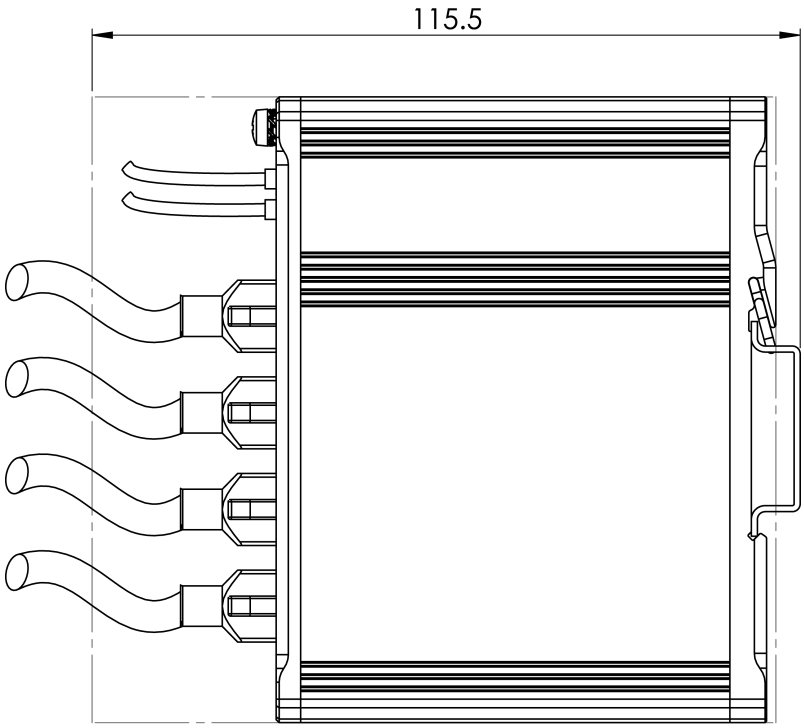

Copyright © 2026, UAB TELTONIKA NETWORKS.
Specifications and information provided in this document are subject to change by UAB TELTONIKA NETWORKS without prior notice.

millbeck.co.uk

Millbeck.

ABOUT

Millbeck brings over 20 years of connectivity expertise, delivering smart, secure IoT solutions that scale seamlessly, from UK based projects to global deployments.

As a Teltonika Diamond Partner, we combine global IoT SIM coverage, industrial-grade hardware, and expert support to deliver scalable, future-ready systems tailored to your exact needs.

TIMELINE

2002 — MILLBECK FOUNDED
Founded to provide data solutions to SMEs

2008 — FIRST IOT SIM SOLUTION PROVIDED
Cellular SIM solutions commence

2018 — ROAMING IOT SIMS LAUNCHED
The next step in IoT connectivity begins

2024 — TELTONIKA DIAMOND PARTNER
Millbeck solidify position as a key Teltonika partner

2025 — 5000+ CUSTOMERS CONNECTED
Continued growth in IoT Connectivity

EXPERTISE

- Routers
- Antennas
- Networking
- IoT SIMs
- IoT Consultancy

SIM TECHNOLOGIES

- 2G/3G, 4G LTE, 5G, CAT-M1, LTE-M, VoLTE & NB-IoT
- eUICC
- eSIM
- Fixed Public IP
- Fixed Private IP
- IPSec VPN
- SSL VPN

sales@millbeck.co.uk - 0113 548 0770 - millbeck.co.uk

Millbeck.

Industry sectors we connect

- Agriculture
- Construction
- BMS & Smart Cities
- Energy & Utilities
- Healthcare
- EV Charging
- Industrial IoT
- Retail & Point of Sale
- Security
- Automotive & Logistics

sales@millbeck.co.uk - 0113 548 0770 - millbeck.co.uk

Millbeck.

SIM & Hardware vendors

TELTONIKA

PROroute

2J antennas

PANORAMA ANTENNAS

POYNTING

DrayTek

QuWireless

OV

kpn IoT

EE

vodafone

O2

sales@millbeck.co.uk – 0113 548 0770 – millbeck.co.uk

Millbeck.



sales@millbeck.co.uk – 0113 548 0770 – millbeck.co.uk