TRM142

TRM142 industrial 4G modem



Energy & utilities

Enterprise

Industrial & automation

Retail

Smart city

LEGACY-READY

Reliable 4G connectivity for devices with serial interfaces

MODERN & STABLE LTE

LTE Cat 4

COST-EFFECTIVE UPGRADE

Retrofit legacy RS232 devices with LTE at scale

FLEXIBLE INTEGRATION

Connect endpoints via RS232 or USB for effortless compatibility

Copyright © 2026, UAB TELTONIKA NETWORKS.
Specifications and information provided in this document are subject to change by UAB TELTONIKA NETWORKS without prior notice.

millbeck.co.uk

Mobile	
Mobile module	4G LTE FDD up to 150 DL/50 UL Mbps, 4G LTE TDD up to 130 DL/30 UL Mbps, 3G HSPA+ up to 21 DL Mbps, 3G HSUPA up to 5.76 UL Mbps, 3G WCDMA up to 384 DL/384 UL kbps, 2G up to 236.8 DL/236.8 UL kbps, 2G GPRS up to 85.6 DL/85.6 UL kbps
3GPP Release	Release 9

Network	
Management Software	Windows Connection Manager, Modem Manager (Linux)
USB Serial Driver	Windows 7/8/8.1/10/11,Linux 2.6~6.3, Android 4.x ~ 13
GNSS Driver	Android 4.x ~ 13
RIL Driver	Android 4.x ~ 13
NDIS Driver	Windows 7/8/8.1/10

Power	
Connector	1 x 4-pin industrial DC power socket
Input voltage range	9 - 30 VDC, 4-pin: overvoltage protection, reverse polarity protection, surge protection
Power consumption	Idle: < 1 W, Max: < 5 W

Physical Interfaces	
Status LEDs	1 x Power LED, 1 x Network LED, 1 x Mobile LED
SIM	1 x SIM slot (Mini SIM – 2FF)
Power	1 x 4-pin power connector
Antennas	1 x SMA for Mobile
USB	1 x Virtual network interface via micro USB
RS232	1 x DB9 connector, RS232 (with RTS, CTS flow control)
Reset	Reboot/User default reset/Factory reset button

Physical Specification	
Casing material	Anodised aluminium housing and panels
Dimensions (W x H x D)	75.9 x 25 x 74.5 mm
Weight	135 g
Mounting options	DIN rail, wall mount, flat surface (all require additional kit)

Operating Environment	
Operating temperature	-40 °C to 75 °C
Operating humidity	10% to 90% non-condensing
Ingress Protection Rating	IP30

Copyright © 2026, UAB TELTONIKA NETWORKS.
Specifications and information provided in this document are subject to change by UAB TELTONIKA NETWORKS without prior notice.

millbeck.co.uk

Certification

EMEA	TRM142 CE TRM142 UKCA TRM142 RoHS TRM142 REACH
APAC	TRM142 RCM
MISCELLANEOUS	TRM142 CB Scheme
SAFETY & ENVIROINMENTAL	TRM142 WEEE

Copyright © 2026, UAB TELTONIKA NETWORKS.
Specifications and information provided in this document are subject to change by UAB TELTONIKA NETWORKS without prior notice.

millbeck.co.uk

Hardware

FRONT VIEW

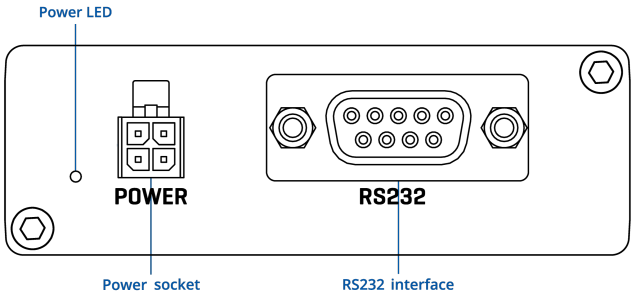

BACK VIEW

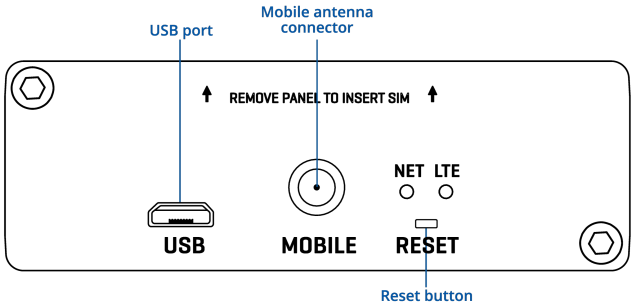

RS232 CONNECTOR PINOUT

1. Data carrier detect (DCD)
2. Receive data (RXD)
3. Transmit data (TXD)
4. Data terminal ready (DTR)
5. Signal ground (GND)
6. Data set ready (DSR)
7. Ready to send (RTS)
8. Clear to send (CTS)
9. Ring indicator (RI)

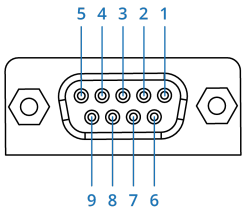

POWER SOCKET PINOUT

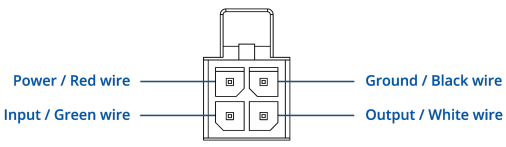

Copyright © 2026, UAB TELTONIKA NETWORKS.
Specifications and information provided in this document are subject to change by UAB TELTONIKA NETWORKS without prior notice.

millbeck.co.uk

Ordering

Standard package*



TRM142



QUICK START GUIDE



9W PSU

*Standard package contents may differ based on standard order codes.

For more information on all available packaging options – please contact us directly.

Copyright © 2026, UAB TELTONIKA NETWORKS.
Specifications and information provided in this document are subject to change by UAB TELTONIKA NETWORKS without prior notice.

millbeck.co.uk

Classification codes

HS Code: 851762
HTS: 8517.62.00

For more information on all available packaging options – please contact us directly.

Available versions

Hardware version	Supported frequencies	Standard order code / Package Contains
TRM142 **0***** Australia, Europe[1], APAC	**4G (LTE-FDD):** B1, B3, B5, B7, B8, B20, B28 **4G (LTE-TDD):** B38, B40, B41 **3G:** B1, B5, B8 **2G:** B3, B8	TRM142000000 / Standard package with EU PSU TRM142000200 / Standard package with UK PSU TRM142000300 / Standard package with AU PSU TRM142000400 / Mass packing code

The price and lead-times for region (operator) specific versions may vary. For more information please contact us.

1 - Regional availability - excluding Russia, Belarus & Iran

TRM142 spatial measurements

Available versions	
Box (W x H x D):	173 x 71 x 148 mm
Device housing (W x H x D)*	74.5 x 25 x 64.2 mm
	*Housing measurements are presented without antenna connectors and screws; for measurements of other device elements look to the sections below

Copyright © 2026, UAB TELTONIKA NETWORKS.
Specifications and information provided in this document are subject to change by UAB TELTONIKA NETWORKS without prior notice.

millbeck.co.uk

TOP VIEW

The figure below depicts the measurements of device and its components as seen from the top:

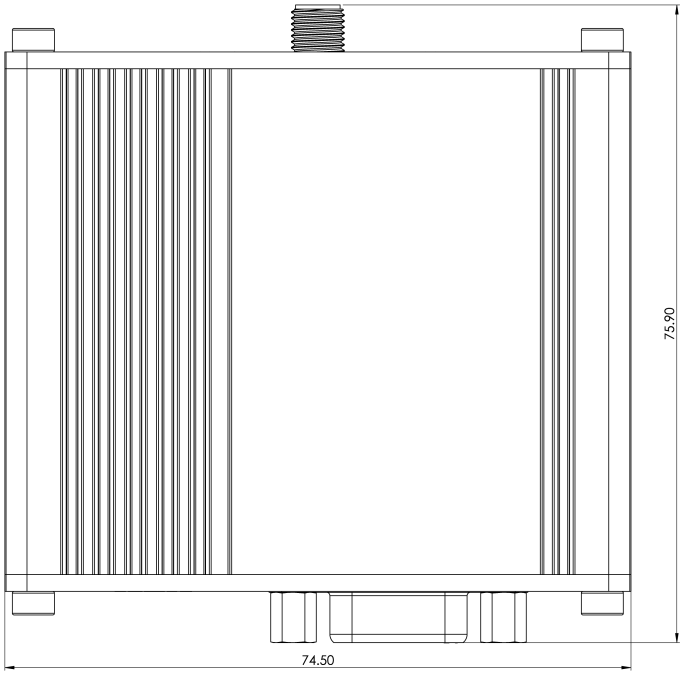

RIGHT VIEW

The figure below depicts the measurements of device and its components as seen from the right:

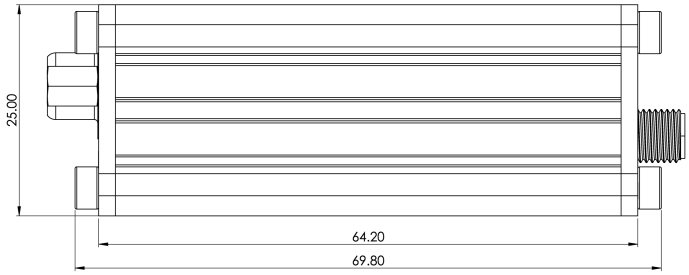

FRONT VIEW

The figure below depicts the measurements of device and its components as seen from the front panel side:

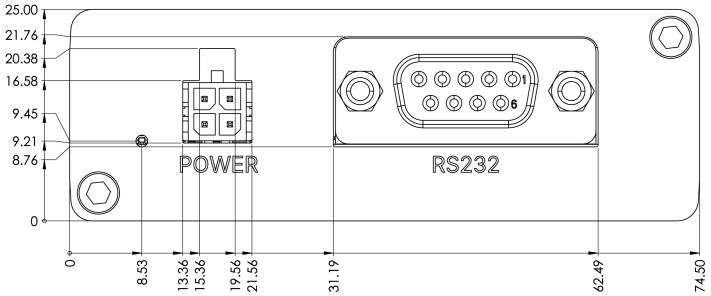

Copyright © 2026, UAB TELTONIKA NETWORKS.
Specifications and information provided in this document are subject to change by UAB TELTONIKA NETWORKS without prior notice.

millbeck.co.uk

REAR VIEW

The figure below depicts the measurements of device and its components as seen from the back panel side:

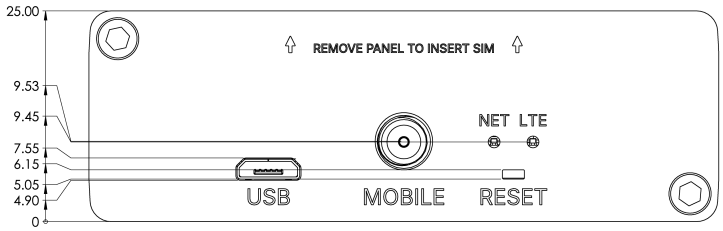

MOUNTING SPACE REQUIREMENTS

The figure below depicts an approximation of the device's dimensions when cables and antennas are attached:

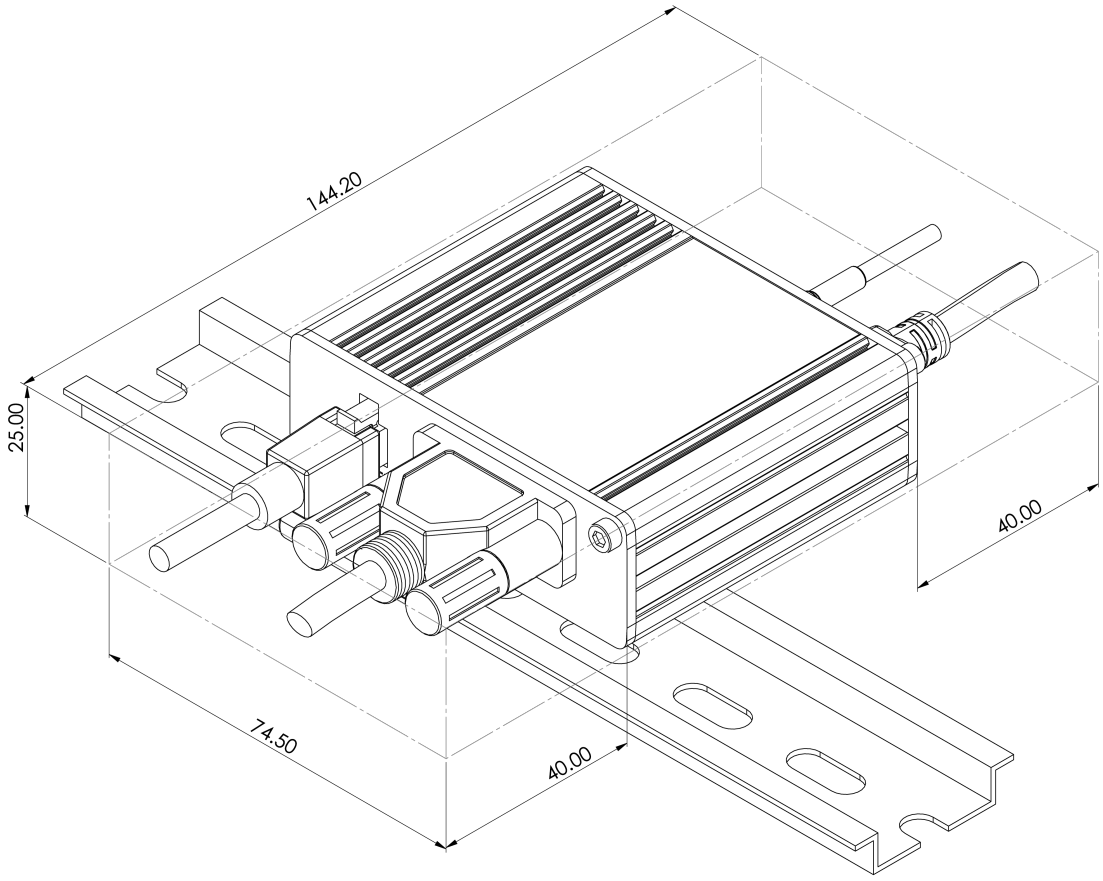

Copyright © 2026, UAB TELTONIKA NETWORKS.
Specifications and information provided in this document are subject to change by UAB TELTONIKA NETWORKS without prior notice.

millbeck.co.uk

Millbeck.

ABOUT

Millbeck brings over 20 years of connectivity expertise, delivering smart, secure IoT solutions that scale seamlessly, from UK based projects to global deployments.

As a Teltonika Diamond Partner, we combine global IoT SIM coverage, industrial-grade hardware, and expert support to deliver scalable, future-ready systems tailored to your exact needs.

TIMELINE

2002 — MILLBECK FOUNDED
Founded to provide data solutions to SMEs

2008 — FIRST IOT SIM SOLUTION PROVIDED
Cellular SIM solutions commence

2018 — ROAMING IOT SIMS LAUNCHED
The next step in IoT connectivity begins

2024 — TELTONIKA DIAMOND PARTNER
Millbeck solidify position as a key Teltonika partner

2025 — 5000+ CUSTOMERS CONNECTED
Continued growth in IoT Connectivity

EXPERTISE

- Routers
- Antennas
- Networking
- IoT SIMs
- IoT Consultancy

SIM TECHNOLOGIES

- 2G/3G, 4G LTE, 5G, CAT-M1, LTE-M, VoLTE & NB-IoT
- eUICC
- eSIM
- Fixed Public IP
- Fixed Private IP
- IPSec VPN
- SSL VPN

sales@millbeck.co.uk - 0113 548 0770 - millbeck.co.uk

Millbeck.

Industry sectors we connect

- Agriculture
- Construction
- BMS & Smart Cities
- Energy & Utilities
- Healthcare
- EV Charging
- Industrial IoT
- Retail & Point of Sale
- Security
- Automotive & Logistics

sales@millbeck.co.uk - 0113 548 0770 - millbeck.co.uk

Millbeck.

SIM & Hardware vendors

TELTONIKA

PROroute

2J antennas

PANORAMA ANTENNAS

POYNTING

DrayTek

QuWireless

OV

kpn IoT

EE

vodafone

O2

sales@millbeck.co.uk – 0113 548 0770 – millbeck.co.uk

Millbeck.



sales@millbeck.co.uk – 0113 548 0770 – millbeck.co.uk