TSW210

INDUSTRIAL ETHERNET SWITCH



Energy & utilities

Enterprise

Industrial & automation

Retail

Smart city

ETHERNET

8 x Gigabit Ethernet ports with speeds of up to 1000 Mbps

PLUG AND PLAY

No additional configuration needed

MOUNTING

DIN rail and surface mounting options

SFP

2 x SFP ports for long-range fiber-optic communication

Copyright © 2026, UAB TELTONIKA NETWORKS.
Specifications and information provided in this document are subject to change by UAB TELTONIKA NETWORKS without prior notice.

millbeck.co.uk

INDUSTRIAL PROTOCOLS

Profinet	Profinet Class A conformance (available with optional order code)

Ethernet

ETH	8 x ETH ports, 10/100/1000 Mbps, supports auto MDI/MDIX crossover
Fibre	2 x SFP ports
IEEE 802.3 series standards	802.3i, 802.3u, 802.3ab, 802.3x, 802.3az

Power

Connector	2-pin industrial DC power socket
Input voltage range	7 – 57 VDC, reverse polarity protection: -80Vmax
Power consumption	Idle: ~1.03 W / Max: 3.71 W
	Surge at AC mains power port**: 1kV Line to line; 2kV line to ground, 1.2/50us, IEC 61000-4-5 Surge at signal port (Ethernet): 1kV Line to Ground, 1.2/50us, IEC 61000-4-5
	**Tested with Teltonika's PSU. Test does not apply to direct DC power.

Physical Interfaces

Ethernet	8 x RJ45 ports, 10/100/1000 Mbps
Fibre	2 x SFP ports
Status LEDs	1 x Power LED, 16 x ETH status LEDs 2 x SFP status LEDs
Power	1 x 2-pin industrial DC power socket
Other	1 x Grounding screw

Physical Specification

Casing material	Anodised aluminium housing and panels
Dimensions (W x H x D)	132 x 44.2 x 95.1 mm
Weight	500 g
Mounting options	Integrated DIN rail bracket; wall mount and flat surface (additional kit needed)

Operating Environment

Operating temperature	-40 °C to 75 °C
Operating humidity	10% to 90% non-condensing
Ingress Protection Rating	IP30

Copyright © 2026, UAB TELTONIKA NETWORKS.
Specifications and information provided in this document are subject to change by UAB TELTONIKA NETWORKS without prior notice.

millbeck.co.uk

Performance Specifications

Bandwidth (Non-blocking)	20 Gbps
Packer buffer	128 KB
MAC address table size	2K entries
Jumbo frame support	9216 bytes

Copyright © 2026, UAB TELTONIKA NETWORKS.
Specifications and information provided in this document are subject to change by UAB TELTONIKA NETWORKS without prior notice.

millbeck.co.uk

Certification

EMEA	TSW210 CE TSW210 UKCA TSW210 EAC TSW210 RoHS TSW210 REACH TSW210 CITC TSW210 Kenya TSW210 Morocco ANRT
APAC	TSW210 RCM TSW210 SDPPI (POSTEL) TSW210 MTCTE
AMERICAS	TSW210 FCC TSW210 IC(ISED) TSW210 UL/CSA Safety TSW210 NOM
MISCELLANEOUS	TSW210 CB Scheme
SAFETY & ENVIROINMENTAL	TSW210 WEEE

Copyright © 2026, UAB TELTONIKA NETWORKS.
Specifications and information provided in this document are subject to change by UAB TELTONIKA NETWORKS without prior notice.

millbeck.co.uk

Hardware

FRONT VIEW

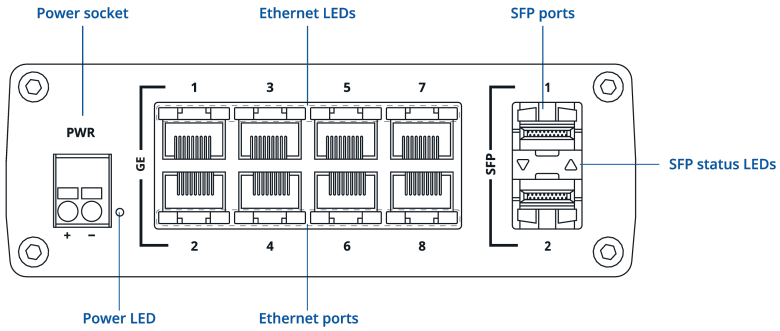

BACK VIEW

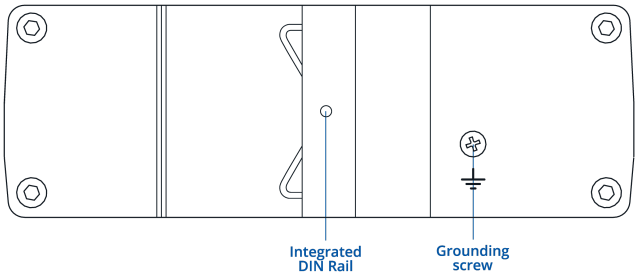

RJ45 LED MEANING

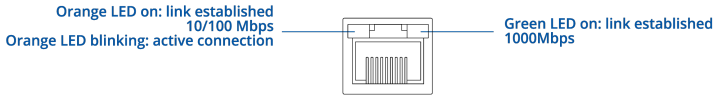

POWER SOCKET PINOUT

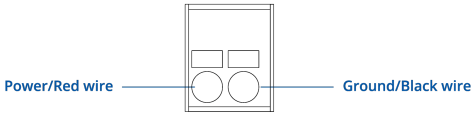

SFP LED MEANING

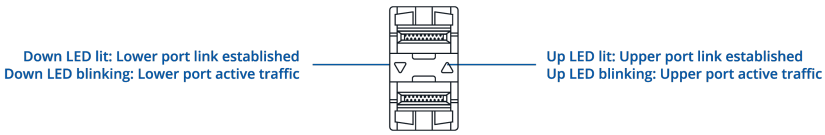

Copyright © 2026, UAB TELTONIKA NETWORKS.
Specifications and information provided in this document are subject to change by UAB TELTONIKA NETWORKS without prior notice.

millbeck.co.uk

Ordering

Standard package*



TSW210



QUICK START GUIDE

*Standard package contents may differ based on standard order codes.

For more information on all available packaging options – please contact us directly.

Copyright © 2026, UAB TELTONIKA NETWORKS.
Specifications and information provided in this document are subject to change by UAB TELTONIKA NETWORKS without prior notice.

millbeck.co.uk

Classification codes

HS Code: 851762
HTS: 8517.62.00

For more information on all available packaging options – please contact us directly.

Available versions

Hardware version	Supported frequencies	Standard order code / Package Contains
TSW210 *****0	N/A	TSW210000040 / Standard package withouth PSU
TSW210 *****1 **Profinet Class A conformance**	N/A	TSW210000011 / Standard package without PSU

TSW210 spatial measurements

Available versions	
Device housing (W x H x D)	132 x 44.2 x 95.1 mm
Box:	135 x 47 x 107 mm
	*Housing measurements are presented without antenna connectors and screws; for measurements of other device elements look to the sections below

Copyright © 2026, UAB TELTONIKA NETWORKS.
Specifications and information provided in this document are subject to change by UAB TELTONIKA NETWORKS without prior notice.

millbeck.co.uk

TOP VIEW

The figure below depicts the measurements of device and its components as seen from the top:

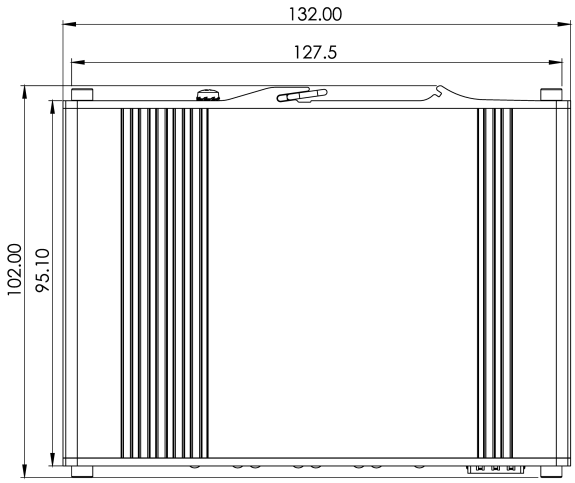

RIGHT VIEW

The figure below depicts the measurements of device and its components as seen from the right:

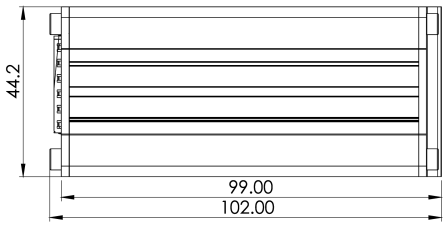

FRONT VIEW

The figure below depicts the measurements of device and its components as seen from the front panel side:

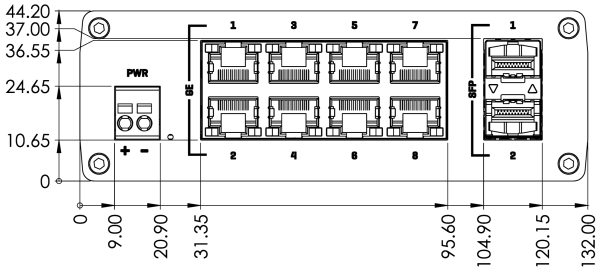

Copyright © 2026, UAB TELTONIKA NETWORKS.
Specifications and information provided in this document are subject to change by UAB TELTONIKA NETWORKS without prior notice.

millbeck.co.uk

BACK VIEW

The figure below depicts the measurements of device and its components as seen from the back panel side:

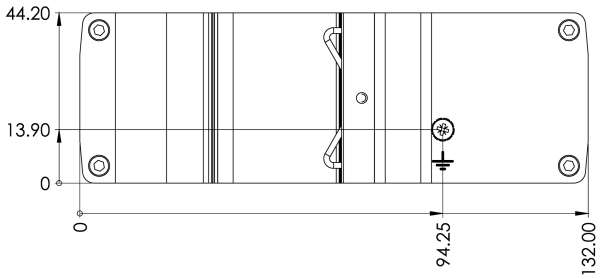

MOUNTING SPACE REQUIREMENTS

The figure below depicts an approximation of the device's dimensions when cables and antennas are attached:

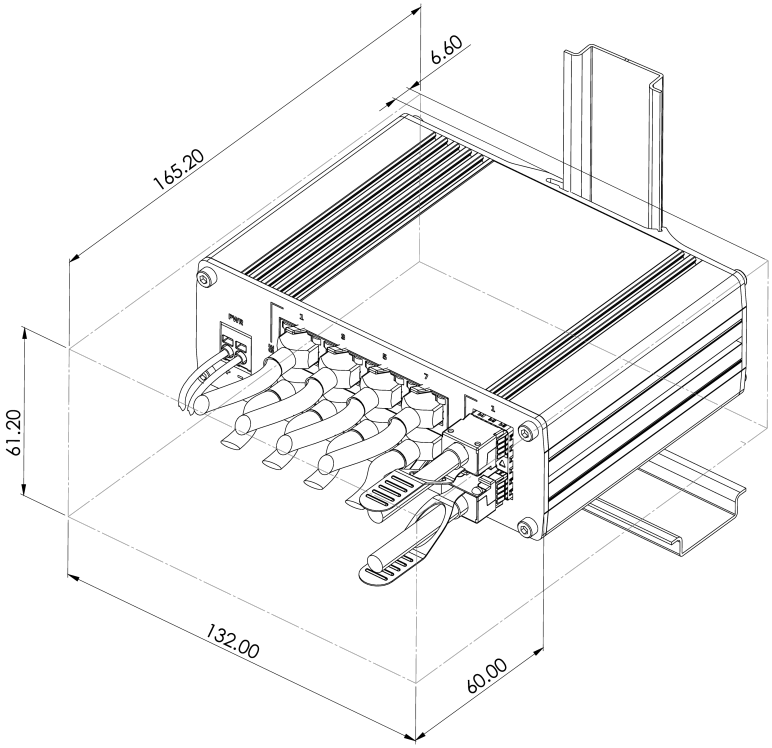

Copyright © 2026, UAB TELTONIKA NETWORKS.
Specifications and information provided in this document are subject to change by UAB TELTONIKA NETWORKS without prior notice.

millbeck.co.uk

Millbeck.

ABOUT

Millbeck brings over 20 years of connectivity expertise, delivering smart, secure IoT solutions that scale seamlessly, from UK based projects to global deployments.

As a Teltonika Diamond Partner, we combine global IoT SIM coverage, industrial-grade hardware, and expert support to deliver scalable, future-ready systems tailored to your exact needs.

TIMELINE

2002 — MILLBECK FOUNDED
Founded to provide data solutions to SMEs

2008 — FIRST IOT SIM SOLUTION PROVIDED
Cellular SIM solutions commence

2018 — ROAMING IOT SIMS LAUNCHED
The next step in IoT connectivity begins

2024 — TELTONIKA DIAMOND PARTNER
Millbeck solidify position as a key Teltonika partner

2025 — 5000+ CUSTOMERS CONNECTED
Continued growth in IoT Connectivity

EXPERTISE

- Routers
- Antennas
- Networking
- IoT SIMs
- IoT Consultancy

SIM TECHNOLOGIES

- 2G/3G, 4G LTE, 5G, CAT-M1, LTE-M, VoLTE & NB-IoT
- eUICC
- eSIM
- Fixed Public IP
- Fixed Private IP
- IPSec VPN
- SSL VPN

sales@millbeck.co.uk - 0113 548 0770 - millbeck.co.uk

Millbeck.

Industry sectors we connect

- Agriculture
- Construction
- BMS & Smart Cities
- Energy & Utilities
- Healthcare
- EV Charging
- Industrial IoT
- Retail & Point of Sale
- Security
- Automotive & Logistics

sales@millbeck.co.uk - 0113 548 0770 - millbeck.co.uk

Millbeck.

SIM & Hardware vendors

TELTONIKA

PROroute

2J antennas

PANORAMA ANTENNAS

POYNTING

DrayTek

QuWireless

OV

kpn IoT

EE

vodafone

O2

sales@millbeck.co.uk – 0113 548 0770 – millbeck.co.uk

Millbeck.



sales@millbeck.co.uk – 0113 548 0770 – millbeck.co.uk