TRM200

INDUSTRIAL 4G Cat 4 MODEM



Energy & utilities

Enterprise

Industrial & automation

Retail

Smart city

CONNECTIVITY

4G Cat 4, 3G, 2G

MICRO USB

For powering and data connectivity

EXTERNAL ANTENNA

For enhanced network reliability

COMPACT & DURABLE

Small size, easy installation

Copyright © 2026, UAB TELTONIKA NETWORKS.
Specifications and information provided in this document are subject to change by UAB TELTONIKA NETWORKS without prior notice.

millbeck.co.uk

Mobile	
Mobile module	4G – Cat 4 up to 75 DL/50 UL Mbps, 3G – Up to 42 DL/5.76 UL Mbps, 2G – Up to 236.8 DL/ 236.8 UL kbps
3GPP Release	Release 9
TRM SOFTWARE	
USB Serial Driver	Windows 7/8/8.1/10, Linux 2.6 or later, Android 2.3/4.0/4.2/4.4/5.0/5.1/6.0/7.0
NDIS Driver	Windows 7/8/8.1/10
Power	
Connector	microUSB
Input voltage range	5V - powered via microUSB
Power consumption	Idle: < 0.9 W, Max: < 3.2 W
Physical Interfaces	
Status LEDs	1 x Power LED, 1 x Network LED, 1 x Mobile LED
SIM	1 x SIM slot (Mini SIM – 2FF), 1.8 V/3 V
Power	1x microUSB
Antennas	1 x SMA for Mobile
Physical Specification	
Casing material	Anodised aluminium housing and panels
Dimensions (W x H x D)	74.5 x 25 x 64.5 mm
Weight	274 g
Mounting options	DIN rail, wall mount, flat surface (all require additional kit)
Operating Environment	
Operating temperature	-40 °C to 75 °C
Operating humidity	10% to 90% non-condensing
Ingress Protection Rating	IP30

Copyright © 2026, UAB TELTONIKA NETWORKS.
Specifications and information provided in this document are subject to change by UAB TELTONIKA NETWORKS without prior notice.

millbeck.co.uk

Certification

EMEA	TRM200 CE TRM200 UKCA
MISCELLANEOUS	TRM200 CB Scheme
SAFETY & ENVIROINMENTAL	TRM200 WEEE

Copyright © 2026, UAB TELTONIKA NETWORKS.
Specifications and information provided in this document are subject to change by UAB TELTONIKA NETWORKS without prior notice.

millbeck.co.uk

Hardware

FRONT VIEW

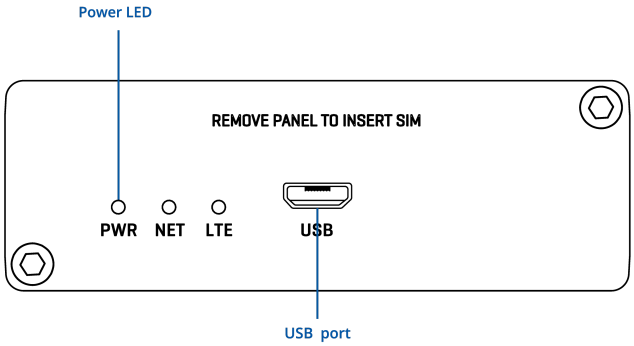

BACK VIEW

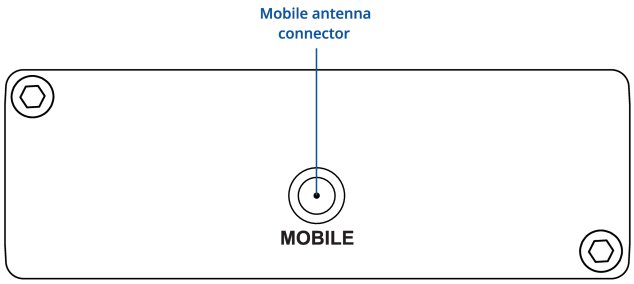

Copyright © 2026, UAB TELTONIKA NETWORKS.
Specifications and information provided in this document are subject to change by UAB TELTONIKA NETWORKS without prior notice.

millbeck.co.uk

Ordering

Standard package*



TRM200



QUICK START GUIDE



MOBILE SMA ANTENNA



MICRO-USB CABLE (0.8 M)



HEX KEY

*Standard package contents may differ based on standard order codes.

For more information on all available packaging options – please contact us directly.

Copyright © 2026, UAB TELTONIKA NETWORKS.
Specifications and information provided in this document are subject to change by UAB TELTONIKA NETWORKS without prior notice.

millbeck.co.uk

Classification codes

HS Code: 851762
HTS: 8517.62.00

For more information on all available packaging options – please contact us directly.

Available versions

Hardware version	Supported frequencies	Standard order code / Package Contains
TRM200 **0***** EMEA[1], Thailand, Australia, New Zealand	**4G (LTE-FDD):** B1, B3, B5, B7, B8, B20, B28 **4G (LTE-TDD):** B38, B40, B41 **3G:** B1, B8 **2G:** B3, B8	TRM200000000 / Standard package TRM200000200 / Mass packing code

The price and lead-times for region (operator) specific versions may vary. For more information please contact us.

1 - Regional availability - excluding Russia, Belarus & Iran

TRM200 spatial measurements

Available versions	
Box (W x H x D):	173 x 71 x 148 mm
Device housing (W x H x D)*	74.5 x 25 x 64.4 mm
	*Housing measurements are presented without antenna connectors and screws; for measurements of other device elements look to the sections below

Copyright © 2026, UAB TELTONIKA NETWORKS.
Specifications and information provided in this document are subject to change by UAB TELTONIKA NETWORKS without prior notice.

millbeck.co.uk

TOP VIEW

The figure below depicts the measurements of device and its components as seen from the top:

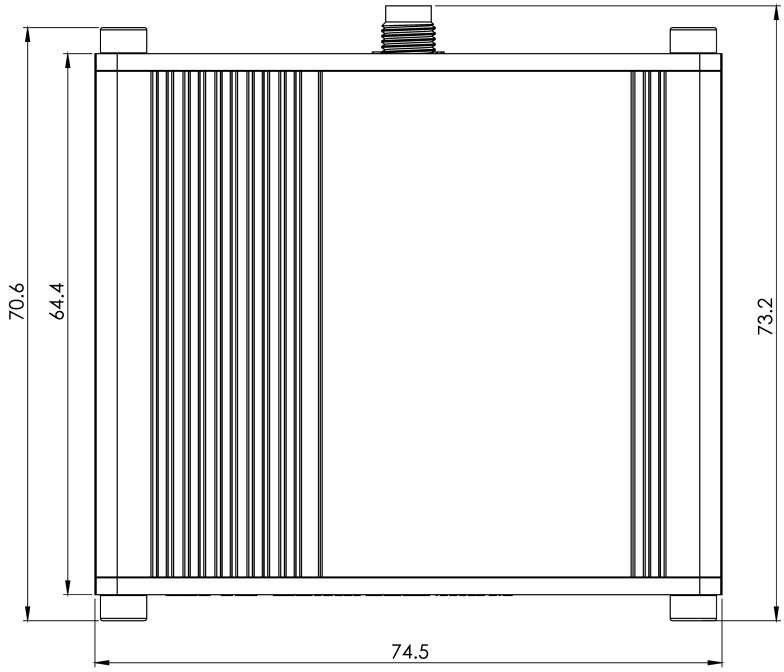

RIGHT VIEW

The figure below depicts the measurements of device and its components as seen from the right:

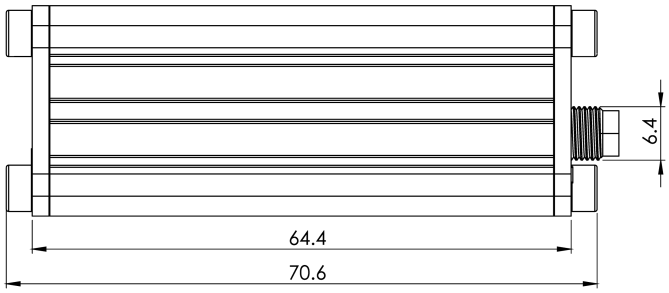

FRONT VIEW

The figure below depicts the measurements of device and its components as seen from the front panel side:

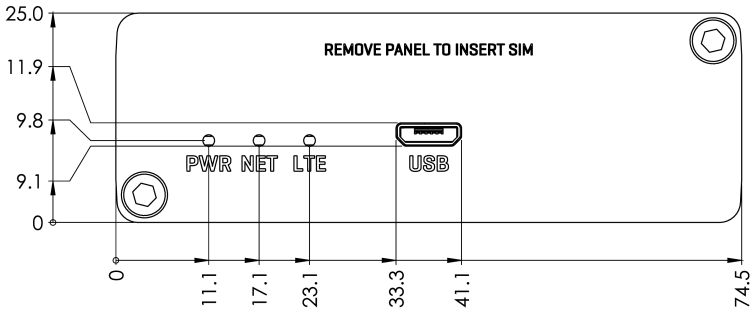

Copyright © 2026, UAB TELTONIKA NETWORKS.
Specifications and information provided in this document are subject to change by UAB TELTONIKA NETWORKS without prior notice.

millbeck.co.uk

REAR VIEW

The figure below depicts the measurements of device and its components as seen from the back panel side:

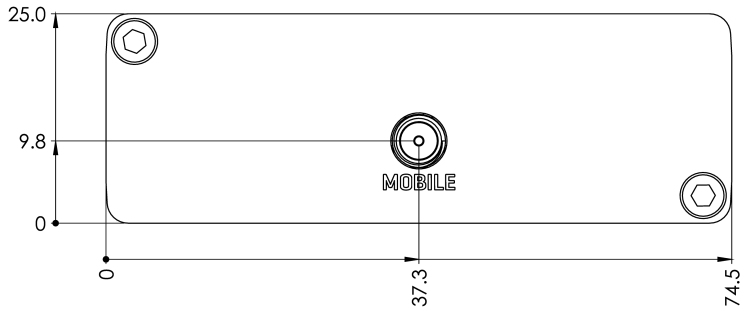

MOUNTING SPACE REQUIREMENTS

The figure below depicts an approximation of the device's dimensions when cables and antennas are attached:

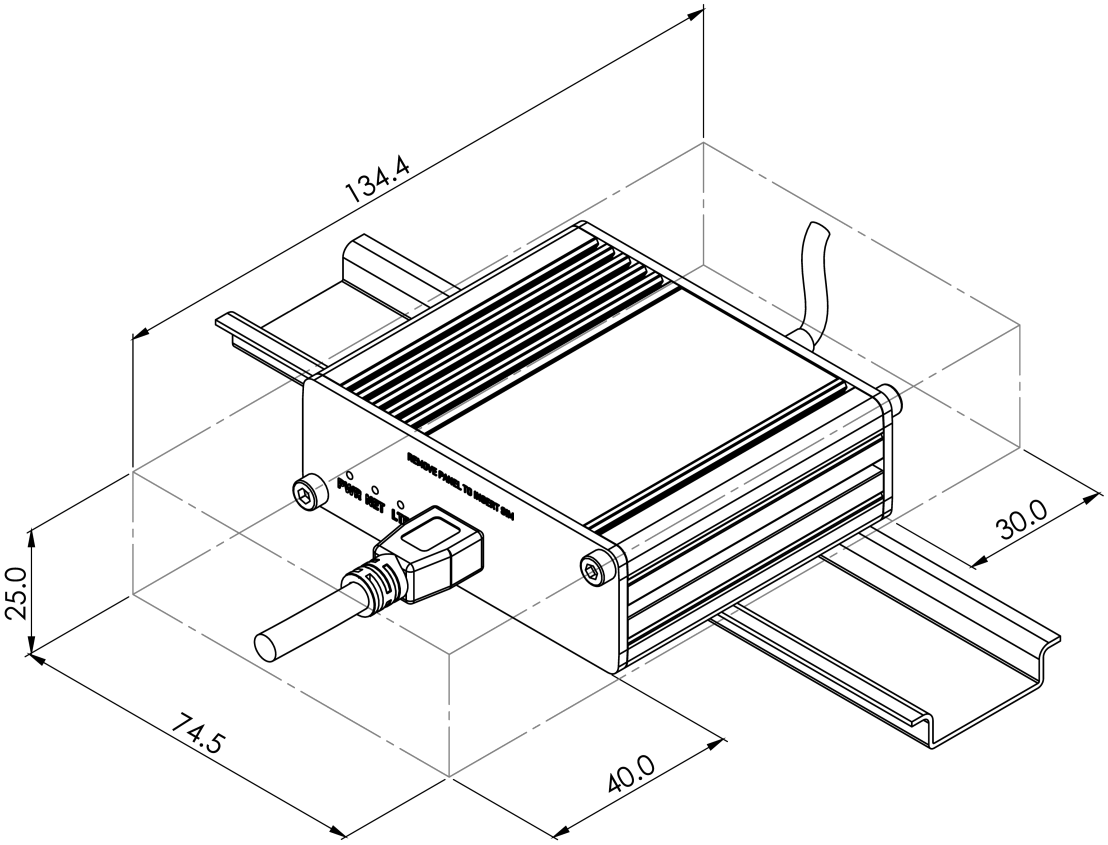

Copyright © 2026, UAB TELTONIKA NETWORKS.
Specifications and information provided in this document are subject to change by UAB TELTONIKA NETWORKS without prior notice.

millbeck.co.uk

Millbeck.

ABOUT

Millbeck brings over 20 years of connectivity expertise, delivering smart, secure IoT solutions that scale seamlessly, from UK based projects to global deployments.

As a Teltonika Diamond Partner, we combine global IoT SIM coverage, industrial-grade hardware, and expert support to deliver scalable, future-ready systems tailored to your exact needs.

TIMELINE

2002 — MILLBECK FOUNDED
Founded to provide data solutions to SMEs

2008 — FIRST IOT SIM SOLUTION PROVIDED
Cellular SIM solutions commence

2018 — ROAMING IOT SIMS LAUNCHED
The next step in IoT connectivity begins

2024 — TELTONIKA DIAMOND PARTNER
Millbeck solidify position as a key Teltonika partner

2025 — 5000+ CUSTOMERS CONNECTED
Continued growth in IoT Connectivity

EXPERTISE

- Routers
- Antennas
- Networking
- IoT SIMs
- IoT Consultancy

SIM TECHNOLOGIES

- 2G/3G, 4G LTE, 5G, CAT-M1, LTE-M, VoLTE & NB-IoT
- eUICC
- eSIM
- Fixed Public IP
- Fixed Private IP
- IPSec VPN
- SSL VPN

sales@millbeck.co.uk - 0113 548 0770 - millbeck.co.uk

Millbeck.

Industry sectors we connect

- Agriculture
- Construction
- BMS & Smart Cities
- Energy & Utilities
- Healthcare
- EV Charging
- Industrial IoT
- Retail & Point of Sale
- Security
- Automotive & Logistics

sales@millbeck.co.uk - 0113 548 0770 - millbeck.co.uk

Millbeck.

SIM & Hardware vendors

TELTONIKA

PROroute

2J antennas

PANORAMA ANTENNAS

POYNTING

DrayTek

QuWireless

OV

kpn IoT

EE

vodafone

O2

sales@millbeck.co.uk – 0113 548 0770 – millbeck.co.uk

Millbeck.



sales@millbeck.co.uk – 0113 548 0770 – millbeck.co.uk