TRM500

5G MODEM WITH USB TYPE-C



Energy & utilities

Enterprise

Industrial & automation

Retail

Smart city

5G

Ultra-high cellular speeds of up to 3.4 Gbps

FUTURE-PROOFING

Backward compatible with 4G (Cat 19) and 3G

USB TYPE-C

For simultaneous network data and powering

COMPACT

Small size, easy installation

Copyright © 2026, UAB TELTONIKA NETWORKS.
Specifications and information provided in this document are subject to change by UAB TELTONIKA NETWORKS without prior notice.

millbeck.co.uk

Mobile	
Mobile module	5G Sub-6Ghz SA/NSA 2.4/3.4Gbps DL (4×4 MIMO), 900/550 Mbps UL (2×2); 4G (LTE) – LTE Cat 19 1.6Gbps DL, Cat 18 200Mbps UL; 3G – 42 Mbps DL, 5.76Mbps UL
3GPP Release	Release 16

TRM SOFTWARE	
Management Software	Windows Connection Manager, Modem Manager (Linux)
USB Serial Driver	Windows 7/8/8.1/10/11,Linux 2.6~6.3,Android 4.x ~ 13
GNSS Driver	Android 4.x ~ 13
RIL Driver	Android 4.x ~ 13
NDIS Driver	Windows 7/8/8.1/10/11
MBIM Driver	Windows 8/8.1/10/11, Linux 3.18~6.3
Gobinet Driver	Linux 2.6/3.x/4.1~4.14
QMI_WWAN Driver	Linux 3.4~6.3

Power	
Connector	1 x 4-pin industrial DC power socket 1 x USB Type-C (The USB host must provide 5V @ 3A to power the device via the USB Type-C port)
Input voltage range	4-pin: 9 - 30 VDC, overvoltage protection, reverse polarity protection, surge protection >35 VDC 10us max USB Type-C: 5 VDC
Power consumption	Idle: < 5 W, Max: < 12 W

Physical Interfaces	
Status LEDs	1 x Power LED, 1 x 5G LED, 1 x Network LED
SIM	1 x SIM slot (Mini SIM – 2FF), 1.8 V/3 V
Power	1 x 4-pin power connector 1 x USB Type-C (The USB host must provide 5V @ 3A to power the device via the USB Type-C port)
Antennas	4 x SMA for Mobile
Other	1 x Virtual network interface via USB Type-C (For power and network data)

Physical Specification	
Casing material	Anodised aluminium housing and panels
Dimensions (W x H x D)	83 x 25 x 85.4 mm
Weight	94.5 g
Mounting options	DIN rail, wall mount, flat surface (all require additional kit)

Copyright © 2026, UAB TELTONIKA NETWORKS.
Specifications and information provided in this document are subject to change by UAB TELTONIKA NETWORKS without prior notice.

millbeck.co.uk

Operating Environment

Operating temperature	-40 °C to 75 °C
Operating humidity	10% to 90% non-condensing
Ingress Protection Rating	IP30

Copyright © 2026, UAB TELTONIKA NETWORKS.
Specifications and information provided in this document are subject to change by UAB TELTONIKA NETWORKS without prior notice.

millbeck.co.uk

Certification

EMEA	TRM500 CE/RED TRM500 UKCA TRM500 RoHS TRM500 REACH TRM500 ICASA
APAC	TRM500 RCM
MISCELLANEOUS	TRM500 CB Scheme
SAFETY & ENVIROINMENTAL	TRM500 WEEE

Copyright © 2026, UAB TELTONIKA NETWORKS.
Specifications and information provided in this document are subject to change by UAB TELTONIKA NETWORKS without prior notice.

millbeck.co.uk

Hardware

FRONT VIEW

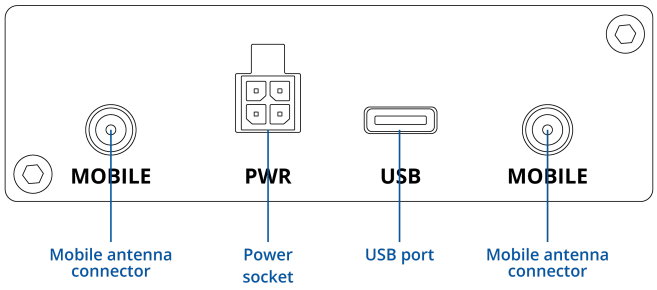

BACK VIEW

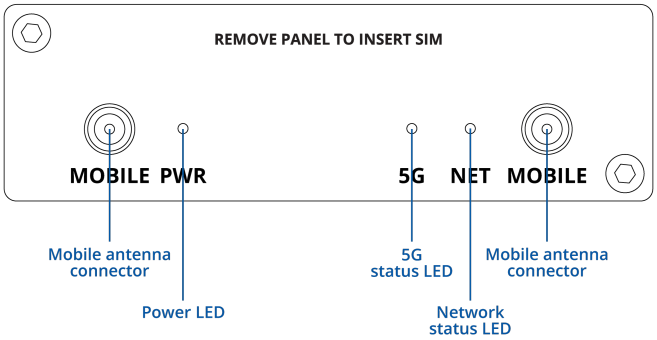

POWER SOCKET PINOUT

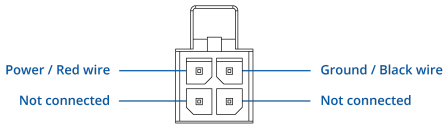

Copyright © 2026, UAB TELTONIKA NETWORKS.
Specifications and information provided in this document are subject to change by UAB TELTONIKA NETWORKS without prior notice.

millbeck.co.uk

Ordering

Standard package*



TRM500



QUICK START GUIDE



9W PSU



4 x 5G MOBILE SMA ANTENNAS



USB TYPE-C CABLE (0.8M)



HEX KEY



SIM ADAPTER KIT

*Standard package contents may differ based on standard order codes.

For more information on all available packaging options – please contact us directly.

Copyright © 2026, UAB TELTONIKA NETWORKS.
Specifications and information provided in this document are subject to change by UAB TELTONIKA NETWORKS without prior notice.

millbeck.co.uk

Classification codes

HS Code: 851762
HTS: 8517.62.00

For more information on all available packaging options – please contact us directly.

Available versions

Hardware version	Supported frequencies	Standard order code / Package Contains
TRM500 **0***** EMEA[1], APAC[2], Brazil	**5G NR(SA/NSA):** n1, n3, n5, n7, n8, n20, n28, n38, n40, n41, n71, n75, n76, n77, n78 **4G (LTE-FDD):** B1, B3, B5, B7, B8, B20, B28, B32, B71 **4G (LTE-TDD):** B38, B40, B41, B42, B43 **3G:** B1, B5, B8	TRM500000000 / Standard package with EU PSU TRM500000200 / Standard package with UK PSU TRM500000300 / Standard package with AU PSU TRM500000400 / Mass packing code

1 - Regional availability - excluding Russia, Belarus & Iran
2 - Excluding China/Japan
The price and lead-times for region (operator) specific versions may vary. For more information please contact us.

TRM500 spatial measurements

Available versions	
Box:	338 x 57 x 171 mm
Device housing (W x H x D)	83 x 25 x 85.4 mm

Copyright © 2026, UAB TELTONIKA NETWORKS.
Specifications and information provided in this document are subject to change by UAB TELTONIKA NETWORKS without prior notice.

millbeck.co.uk

TOP VIEW

The figure below depicts the measurements of device and its components as seen from the top:

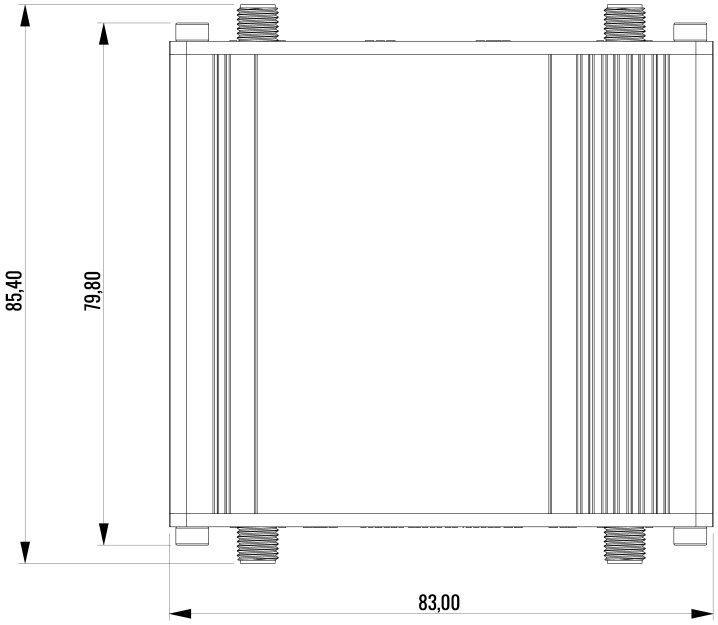

FRONT VIEW

The figure below depicts the measurements of device and its components as seen from the front panel side:

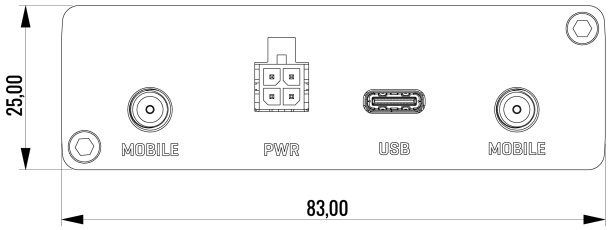

REAR VIEW

The figure below depicts the measurements of device and its components as seen from the back panel side:

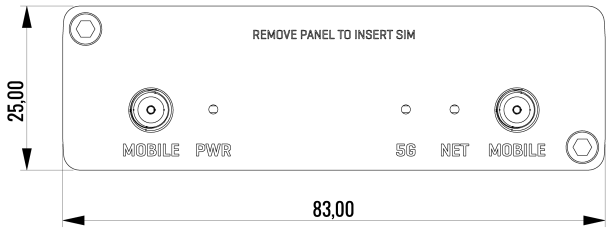

Copyright © 2026, UAB TELTONIKA NETWORKS.
Specifications and information provided in this document are subject to change by UAB TELTONIKA NETWORKS without prior notice.

millbeck.co.uk

MOUNTING SPACE REQUIREMENTS

The figure below depicts an approximation of the device's dimensions when cables and antennas are attached:

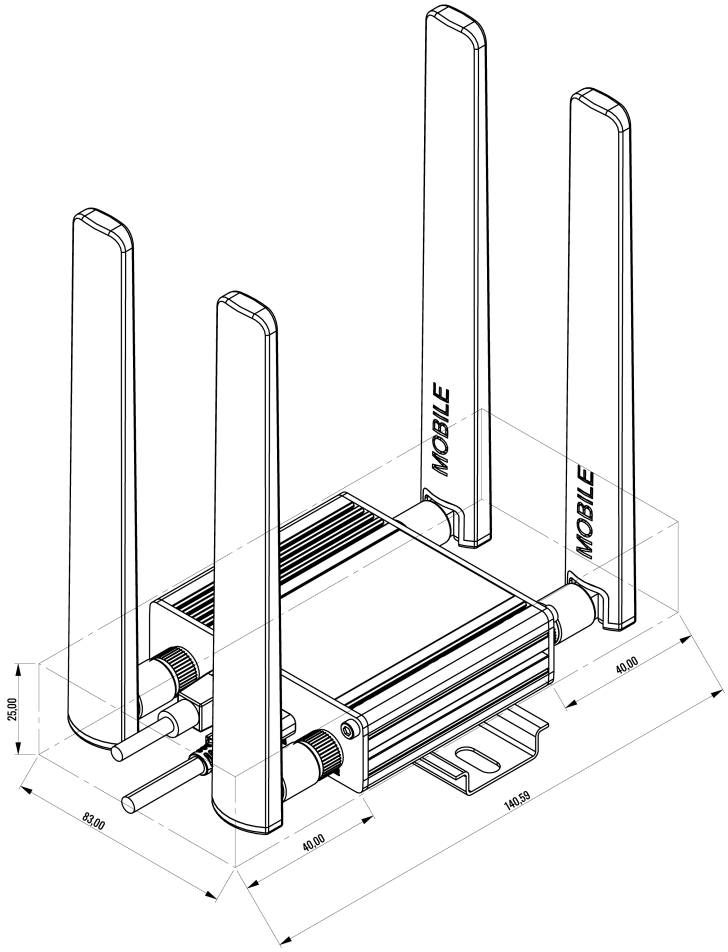

Copyright © 2026, UAB TELTONIKA NETWORKS.
Specifications and information provided in this document are subject to change by UAB TELTONIKA NETWORKS without prior notice.

millbeck.co.uk

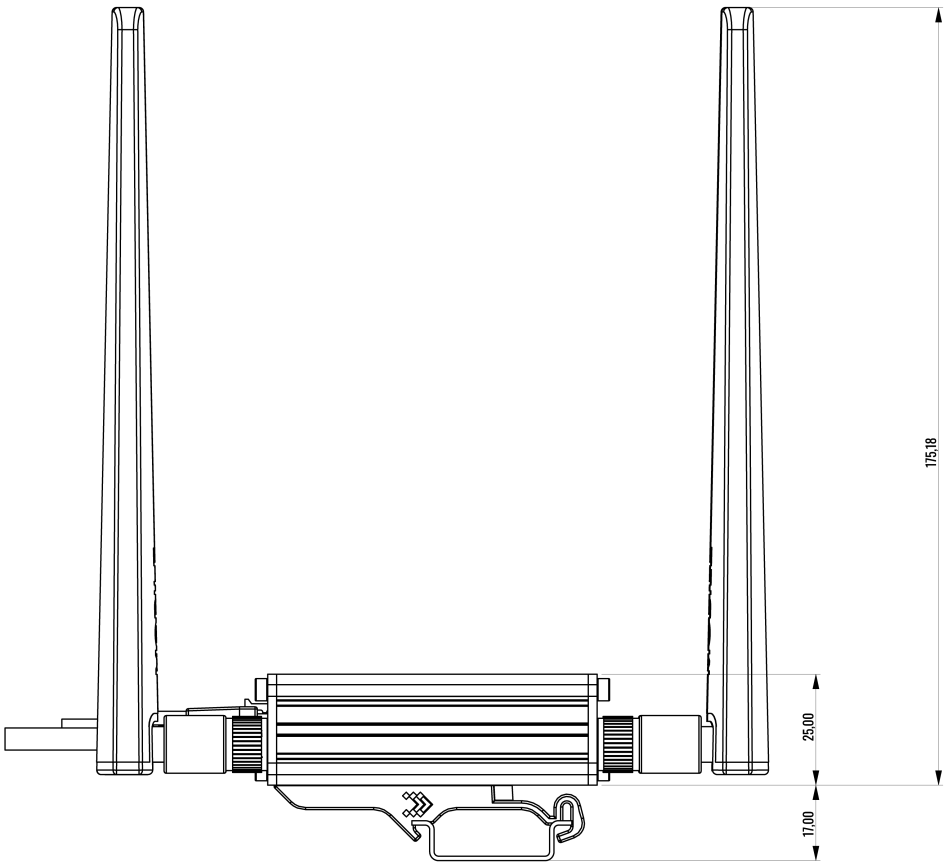

Copyright © 2026, UAB TELTONIKA NETWORKS.
Specifications and information provided in this document are subject to change by UAB TELTONIKA NETWORKS without prior notice.

millbeck.co.uk

Millbeck.

ABOUT

Millbeck brings over 20 years of connectivity expertise, delivering smart, secure IoT solutions that scale seamlessly, from UK based projects to global deployments.

As a Teltonika Diamond Partner, we combine global IoT SIM coverage, industrial-grade hardware, and expert support to deliver scalable, future-ready systems tailored to your exact needs.

TIMELINE

2002 — MILLBECK FOUNDED
Founded to provide data solutions to SMEs

2008 — FIRST IOT SIM SOLUTION PROVIDED
Cellular SIM solutions commence

2018 — ROAMING IOT SIMS LAUNCHED
The next step in IoT connectivity begins

2024 — TELTONIKA DIAMOND PARTNER
Millbeck solidify position as a key Teltonika partner

2025 — 5000+ CUSTOMERS CONNECTED
Continued growth in IoT Connectivity

EXPERTISE

- Routers
- Antennas
- Networking
- IoT SIMs
- IoT Consultancy

SIM TECHNOLOGIES

- 2G/3G, 4G LTE, 5G, CAT-M1, LTE-M, VoLTE & NB-IoT
- eUICC
- eSIM
- Fixed Public IP
- Fixed Private IP
- IPSec VPN
- SSL VPN

sales@millbeck.co.uk - 0113 548 0770 - millbeck.co.uk

Millbeck.

Industry sectors we connect

- Agriculture
- Construction
- BMS & Smart Cities
- Energy & Utilities
- Healthcare
- EV Charging
- Industrial IoT
- Retail & Point of Sale
- Security
- Automotive & Logistics

sales@millbeck.co.uk - 0113 548 0770 - millbeck.co.uk

Millbeck.

SIM & Hardware vendors

TELTONIKA

PROroute

2J antennas

PANORAMA ANTENNAS

POYNTING

DrayTek

QuWireless

OV

kpn IoT

EE

vodafone

O2

sales@millbeck.co.uk – 0113 548 0770 – millbeck.co.uk

Millbeck.



sales@millbeck.co.uk – 0113 548 0770 – millbeck.co.uk