TRM282

GLOBAL 4G MODEM



Energy & utilities

Industrial & automation

Retail

Smart city

GLOBAL LTE

Ensure reliable global connectivity with Telit Cat 4 module

DUAL INTERFACES

Seamlessly bridge modern and legacy equipment with USB & RS232

INTEGRATED GNSS & DI/DO

Expand connectivity options with built-in GNSS and digital input/output

2 X MOBILE ANTENNAS

Improve signal stability in industrial environments

Copyright © 2026, UAB TELTONIKA NETWORKS.
Specifications and information provided in this document are subject to change by UAB TELTONIKA NETWORKS without prior notice.

millbeck.co.uk

Mobile	
Mobile module	4G (LTE) – LTE Cat 4 150Mbps DL, 50Mbps UL; 3G – 42 Mbps DL, 5.76Mbps UL
3GPP Release	Release 11

TRM SOFTWARE	
Management Software	Windows Connection Manager, Modem Manager (Linux)
USB Serial Driver	Windows 7/8/8.1/10/11, Linux >5.8, Android 11, 12, 13, 14, 15
GNSS Driver	Android 11, 13, 14
RIL Driver	Android 11, 12, 13, 14, 15
ECM Driver	Linux >5.8
QMI_WWAN Driver	Linux >5.8

Location Tracking	
GNSS	GPS, GLONASS, BeiDou, Galileo and QZSS
Coordinates	GNSS coordinates via WebUI, SMS, TAVL, RS232
NMEA	NMEA 0183
Server software	Supported server software TAVL
Tracking sensitivity	-160 dBm
Position Accuracy	< 2.0m CEP

Power	
Connector	1 x 4-pin industrial DC power socket 1 x USB Type-C (The USB host must provide 5V @ 0.9A to power the device via the USB Type-C port)
Input voltage range	4-pin: 9 - 30 VDC, overvoltage protection, reverse polarity protection, surge protection >51 VDC 10us max USB Type-C: 5 VDC
Power consumption	Idle: < 0.4 W, Max: < 4 W

Physical Interfaces	
Status LEDs	1 x Power LED, 1 x Status LED
SIM	1 x SIM slot (Mini SIM - 2FF, internal SIM holder), 1.8 V/3 V
Power	1 x 4-pin power connector 1 x USB Type-C (The USB host must provide 5V @ 3A to power the device via the USB Type-C port)
Antennas	2 x SMA for Mobile, 1 x SMA for GNSS
RS232	1 x DB9 connector (for data communication and modem control using AT commands)
USB	1 x Virtual network interface via USB Type-C (for power and modem control, data communication)

Copyright © 2026, UAB TELTONIKA NETWORKS.
Specifications and information provided in this document are subject to change by UAB TELTONIKA NETWORKS without prior notice.

millbeck.co.uk

Physical Specification

Casing material	Anodised aluminium housing and panels
Dimensions (W x H x D)	83 x 25 x 85.8 mm
Weight	171 g
Mounting options	DIN rail, wall mount, flat surface (all require additional kit)

Operating Environment

Operating temperature	-40 °C to 65 °C
Operating humidity	10% to 90% non-condensing
Ingress Protection Rating	IP30

Copyright © 2026, UAB TELTONIKA NETWORKS.
Specifications and information provided in this document are subject to change by UAB TELTONIKA NETWORKS without prior notice.

millbeck.co.uk

Certification

EMEA	TRM282 CE TRM282 UKCA TRM282 RoHS TRM282 REACH
MISCELLANEOUS	TRM282 CB Scheme
SAFETY & ENVIROINMENTAL	TRM282 WEEE

Copyright © 2026, UAB TELTONIKA NETWORKS.
Specifications and information provided in this document are subject to change by UAB TELTONIKA NETWORKS without prior notice.

millbeck.co.uk

Hardware

FRONT VIEW

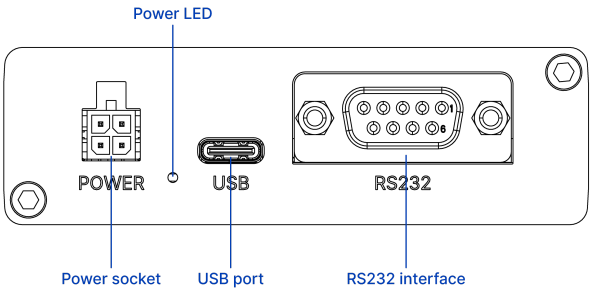

BACK VIEW

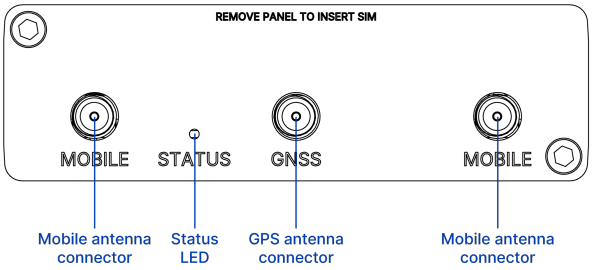

POWER SOCKET PINOUT

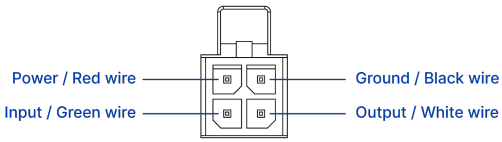

Copyright © 2026, UAB TELTONIKA NETWORKS.
Specifications and information provided in this document are subject to change by UAB TELTONIKA NETWORKS without prior notice.

millbeck.co.uk

Ordering

Standard package*



TRM282



QUICK START GUIDE



2 X MOBILE SMA ANTENNAS



HEX KEY



SIM ADAPTER KIT



USB TYPE-C CABLE

*Standard package contents may differ based on standard order codes.

For more information on all available packaging options – please contact us directly.

Copyright © 2026, UAB TELTONIKA NETWORKS.
Specifications and information provided in this document are subject to change by UAB TELTONIKA NETWORKS without prior notice.

millbeck.co.uk

Classification codes

HS Code: 851762
HTS: 8517.62.00

For more information on all available packaging options – please contact us directly.

Available versions

Hardware version	Supported frequencies	Standard order code / Package Contains
TRM282 **A***** Global[1]	**4G:** B1, B2, B3, B4, B5, B7, B8, B8_US, B9, B12, B13, B14, B18, B19, B20, B25, B26, B28 **3G:** B1, B2, B4, B5, B6, B8, B19 **2G:** B2, B3, B5, B8	TRM282AAAAA0 / Standard package without PSU TRM282AAADA0 / Mass packing code

The price and lead-times for region (operator) specific versions may vary. For more information please contact us.

1 - Regional availability - excluding Russia, Belarus & Iran

TRM282 spatial measurements

Available versions	
Device housing (W x H x D)	83 x 25 x 85.8 mm
Box:	156 x 68 x 144 mm

Copyright © 2026, UAB TELTONIKA NETWORKS.
Specifications and information provided in this document are subject to change by UAB TELTONIKA NETWORKS without prior notice.

millbeck.co.uk

TOP VIEW

The figure below depicts the measurements of device and its components as seen from the top:

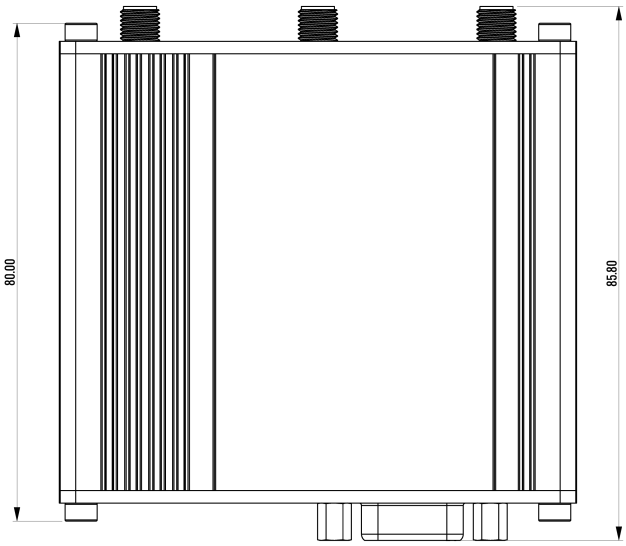

LEFT VIEW

The figure below depicts the measurements of device and its components as seen from the left:

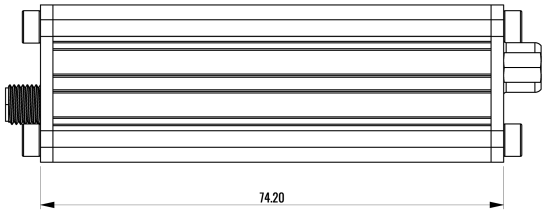

FRONT VIEW

The figure below depicts the measurements of device and its components as seen from the front panel side:

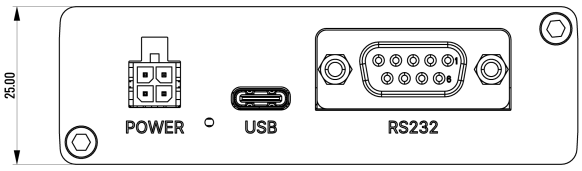

Copyright © 2026, UAB TELTONIKA NETWORKS.
Specifications and information provided in this document are subject to change by UAB TELTONIKA NETWORKS without prior notice.

millbeck.co.uk

REAR VIEW

The figure below depicts the measurements of device and its components as seen from the back panel side:

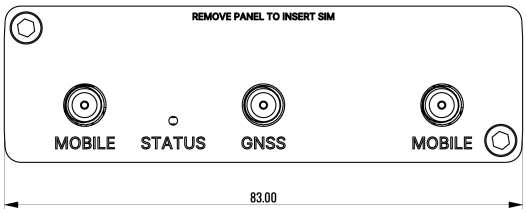

MOUNTING SPACE REQUIREMENTS

The figure below depicts an approximation of the device's dimensions when cables and antennas are attached:

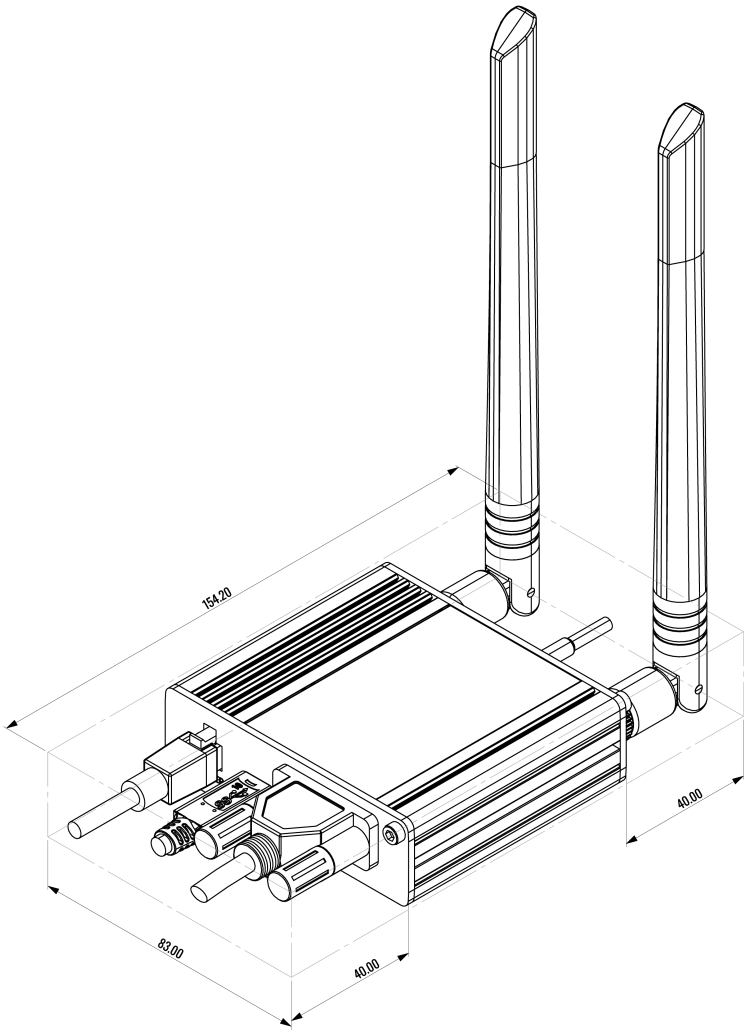

Copyright © 2026, UAB TELTONIKA NETWORKS.
Specifications and information provided in this document are subject to change by UAB TELTONIKA NETWORKS without prior notice.

millbeck.co.uk

DIN RAIL

The scheme below depicts protrusion measurements of an attached DIN Rail:

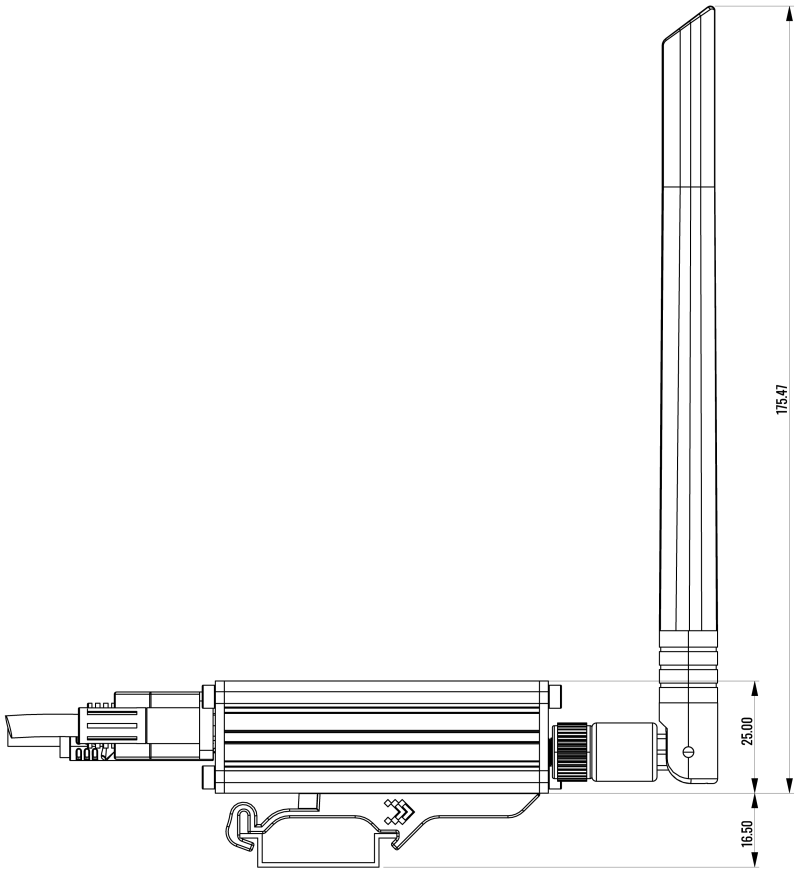

Copyright © 2026, UAB TELTONIKA NETWORKS.
Specifications and information provided in this document are subject to change by UAB TELTONIKA NETWORKS without prior notice.

millbeck.co.uk

Millbeck.

ABOUT

Millbeck brings over 20 years of connectivity expertise, delivering smart, secure IoT solutions that scale seamlessly, from UK based projects to global deployments.

As a Teltonika Diamond Partner, we combine global IoT SIM coverage, industrial-grade hardware, and expert support to deliver scalable, future-ready systems tailored to your exact needs.

TIMELINE

2002 — MILLBECK FOUNDED
Founded to provide data solutions to SMEs

2008 — FIRST IOT SIM SOLUTION PROVIDED
Cellular SIM solutions commence

2018 — ROAMING IOT SIMS LAUNCHED
The next step in IoT connectivity begins

2024 — TELTONIKA DIAMOND PARTNER
Millbeck solidify position as a key Teltonika partner

2025 — 5000+ CUSTOMERS CONNECTED
Continued growth in IoT Connectivity

EXPERTISE

- Routers
- Antennas
- Networking
- IoT SIMs
- IoT Consultancy

SIM TECHNOLOGIES

- 2G/3G, 4G LTE, 5G, CAT-M1, LTE-M, VoLTE & NB-IoT
- eUICC
- eSIM
- Fixed Public IP
- Fixed Private IP
- IPSec VPN
- SSL VPN

sales@millbeck.co.uk - 0113 548 0770 - millbeck.co.uk

Millbeck.

Industry sectors we connect

- Agriculture
- Construction
- BMS & Smart Cities
- Energy & Utilities
- Healthcare
- EV Charging
- Industrial IoT
- Retail & Point of Sale
- Security
- Automotive & Logistics

sales@millbeck.co.uk - 0113 548 0770 - millbeck.co.uk

Millbeck.

SIM & Hardware vendors

TELTONIKA

PROroute

2J antennas

PANORAMA ANTENNAS

POYNTING

DrayTek

QuWireless

OV

kpn IoT

EE

vodafone

O2

sales@millbeck.co.uk – 0113 548 0770 – millbeck.co.uk

Millbeck.



sales@millbeck.co.uk – 0113 548 0770 – millbeck.co.uk