TAP100

WI-FI ACCESS POINT



Enterprise

Retail

Smart city

POE-IN

Can be powered by PoE devices via RJ45 port

SLEEK DESIGN

UV-stabilized plastic housing that blends in with its environment

EASY INSTALLATION

Integrated mounting bracket for easy ceiling setup

RMS MANAGEMENT

Free access to RMS Management for 24 months

Copyright © 2026, UAB TELTONIKA NETWORKS.
Specifications and information provided in this document are subject to change by UAB TELTONIKA NETWORKS without prior notice.

millbeck.co.uk

Site Manager	
Supported modes	Managed Device
Functionalities	FOTA updates, device status reporting, automatic reboot via ping/wget health checks, centralized wireless SSID configuration

Wireless	
Wireless mode	802.11b/g/n (Wi-Fi 4)
Wi-Fi security	WPA2-Enterprise: PEAP, WPA2-PSK, WPA-EAP, WPA-PSK, WPA3-SAE, WPA3-EAP, OWE; AES-CCMP, TKIP, Auto-cipher modes, client separation, EAP-TLS with PKCS#12 certificates, disable auto-reconnect, 802.11w Protected Management Frames (PMF)
SSID/ESSID	SSID stealth mode and access control based on MAC address
Wi-Fi users	Up to 100 simultaneous connections
Wireless Connectivity Features	Wireless mesh (802.11s), fast roaming (802.11r), BSS transition management (802.11v), radio resource measurement (802.11k)
Wireless MAC filter	Allowlist, blocklist
Wireless QR code generator	Once scanned, a user will automatically enter your network without needing to input login information
TravelMate	Forward Wi-Fi hotspot landing page to a subsequent connected device

Ethernet	
Ethernet	1 x RJ45 port 10/100 Mbps, compliance with IEEE 802.3, IEEE 802.3u, 802.3az standards, supports auto MDI/MDIX crossover

Network	
Network protocols	TCP, UDP, IPv4, IPv6, ICMP, HTTP, HTTPS, SSL v3, TLS, ARP, SSH
DNS over HTTPS	DNS over HTTPS proxy enables secure DNS resolution by routing DNS queries over HTTPS
Hotspot 2.0	Hotspot 2.0 is a Wi-Fi standard that enables seamless, secure, and automatic connection to trusted wireless networks
Traffic Management	Real-time monitoring, wireless signal charts, traffic usage history

Security	
Authentication	SSH key based, HTTPS, CLI, IP & Login attempts block, time-based login blocking, built-in random password generator
VLAN	Tag-based VLAN separation
Certificate Manager	Certificate creation tool allows to create CA, server, client, let's encrypt, SCEP certificates
802.1x	Port-based network access control client

Copyright © 2026, UAB TELTONIKA NETWORKS.
Specifications and information provided in this document are subject to change by UAB TELTONIKA NETWORKS without prior notice.

millbeck.co.uk

Data to Server	
Protocol	HTTP(S), MQTT, Azure MQTT
Data to server	Extract parameters from multiple sources and different protocols, and send them all to a single server; Custom LUA scripting, allowing scripts to utilize the router's Data to server feature

API	
Teltonika Networks Web API (beta) support	Expand your device's possibilities by using a set of configurable API endpoints to retrieve or change data. For more information, please refer to this documentation: https://developers.teltonika-networks.com

Monitoring & Management	
WEB UI	HTTP/HTTPS, status, configuration, FW update, CLI, troubleshoot, multiple event log servers, firmware update availability notifications, event log, system log, kernel log
FOTA	Firmware update from server, automatic notification
SSH	SSH (v1, v2)
Email	Receive email message status alerts of various services
JSON-RPC	Management API over HTTP/HTTPS
RMS	Teltonika Remote Management System (RMS)

System Characteristics	
CPU	Mediatek, 580 MHz, MIPS 24KEc
RAM	64 MB, DDR2
FLASH storage	16 MB, SPI Flash

Firmware/Configuration	
WEB UI	Update FW from file, check FW on server, configuration profiles, configuration backup
FOTA	Update FW
RMS	Update FW/configuration for multiple devices at once
Keep settings	Update FW without losing current configuration
Factory settings reset	A full factory reset restores all system settings, including the IP address, PIN, and user data to the default manufacturer's configuration

FIRMWARE CUSTOMISATION	
Operating system	RutOS (OpenWrt based Linux OS)
Supported languages	Busybox shell, Lua, C, C++
Development tools	SDK package with build environment provided
GPL customization	You can create your own custom, branded firmware and web page application by changing colours, logos, and other elements in our firmware to fit your or your clients' needs
Package Manager	The Package Manager is a service used to install additional software on the device

Copyright © 2026, UAB TELTONIKA NETWORKS.
Specifications and information provided in this document are subject to change by UAB TELTONIKA NETWORKS without prior notice.

millbeck.co.uk

Power	
Connector	RJ45 Socket
Input voltage range	44.0 – 57.0 V
PoE standards	802.3af PoE Class 1
Power consumption	< 2 W Max

Physical Interfaces	
Ethernet	1 x RJ45 ports, 10/100 Mbps
Status LEDs	1 x Power LED (can be turned off from web-UI)
Antennas	2 x Internal for 2.4 GHz Wi-Fi
Antennas specifications	2 x 2400 - 2500 MHz, 50 Ω, VSWR <2.7, gain < 4.9 dBi, omnidirectional
Reset	Reboot/User default reset/Factory reset button

Physical Specification	
Casing material	UV stabilized plastic
Dimensions (W x H x D)	Ø 158 mm x 30 mm
Weight	190 g
Mounting options	AP mounting bracket (for ceiling mount)

Operating Environment	
Operating temperature	-40 °C to 75 °C
Operating humidity	10% to 90% non-condensing
Ingress Protection Rating	IP30

Copyright © 2026, UAB TELTONIKA NETWORKS.
Specifications and information provided in this document are subject to change by UAB TELTONIKA NETWORKS without prior notice.

millbeck.co.uk

Certification

EMEA	TAP100 CE TAP100 UKCA TAP100 EAC TAP100 RoHS TAP100 REACH TAP100 CITC TAP100 Kenya TAP100 ICASA TAP100 ANRT
APAC	TAP100 SDPPI (POSTEL)
AMERICAS	TAP100 FCC TAP100 IC(ISED)
MISCELLANEOUS	TAP100 CB Scheme
SAFETY & ENVIROINMENTAL	TAP100 WEEE

Copyright © 2026, UAB TELTONIKA NETWORKS.
Specifications and information provided in this document are subject to change by UAB TELTONIKA NETWORKS without prior notice.

millbeck.co.uk

Hardware

FRONT VIEW

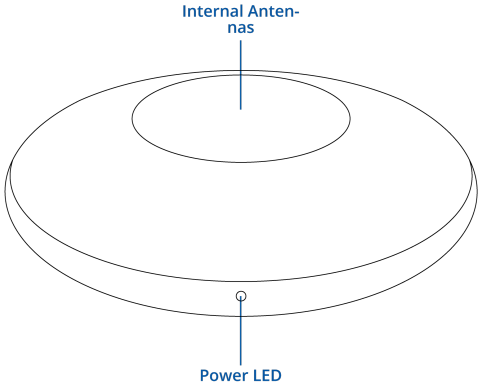

BOTTOM VIEW

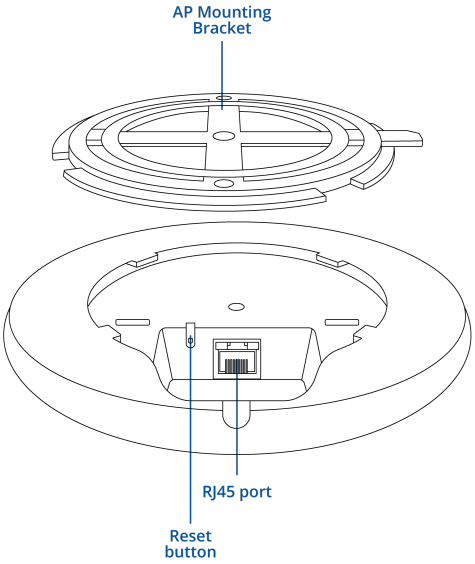

RJ45 LED MEANING



Copyright © 2026, UAB TELTONIKA NETWORKS.
Specifications and information provided in this document are subject to change by UAB TELTONIKA NETWORKS without prior notice.

millbeck.co.uk

Ordering

Standard package*



TAP100



QUICK START GUIDE

*Standard package contents may differ based on standard order codes.

For more information on all available packaging options – please contact us directly.

Copyright © 2026, UAB TELTONIKA NETWORKS.
Specifications and information provided in this document are subject to change by UAB TELTONIKA NETWORKS without prior notice.

millbeck.co.uk

Classification codes

HS Code: 851762
HTS: 8517.62.00

For more information on all available packaging options – please contact us directly.

Available versions

Hardware version	Supported frequencies	Standard order code / Package Contains
TAP100 ******	N/A	TAP100001000 / Standard package TAP100000000 / Standard package with EU PoE injector TAP100000200 / Standard package with UK PoE injector TAP100000300 / Standard package with US PoE injector

TAP100 spatial measurements

Available versions	
Device housing:	Ø 158 mm x 30 mm
Box:	355 x 175 x 60 mm

Copyright © 2026, UAB TELTONIKA NETWORKS.
Specifications and information provided in this document are subject to change by UAB TELTONIKA NETWORKS without prior notice.

millbeck.co.uk

TOP VIEW

The figure below depicts the measurements of device and its components as seen from the top:

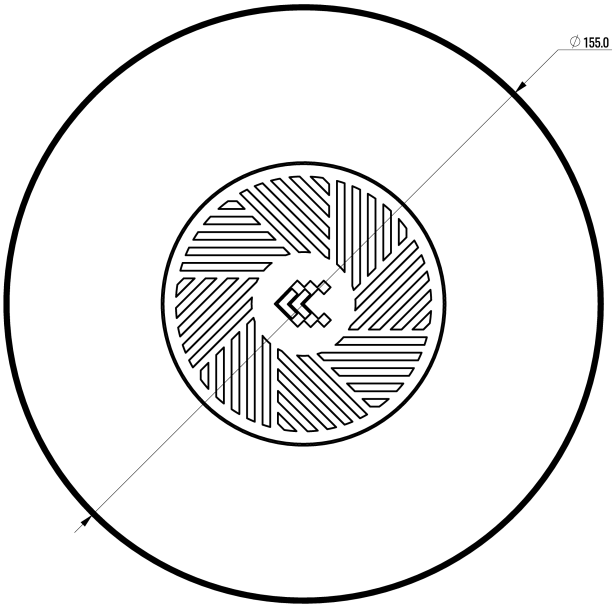

BOTTOM VIEW

The figure below depicts the measurements of device and its components as seen from the bottom side:

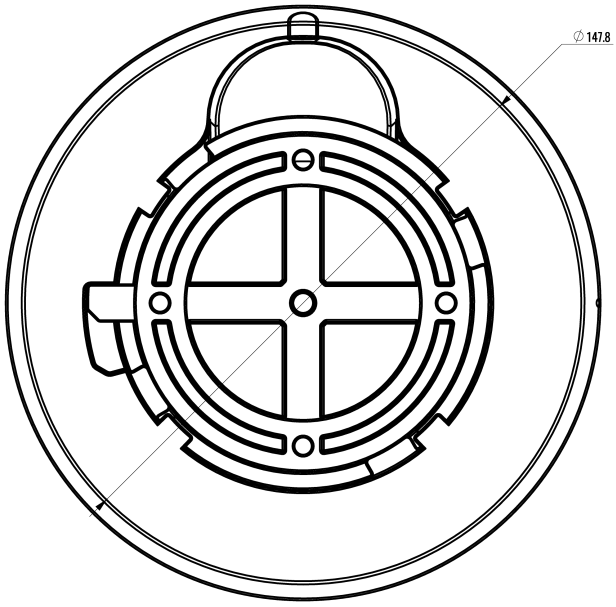

Copyright © 2026, UAB TELTONIKA NETWORKS.
Specifications and information provided in this document are subject to change by UAB TELTONIKA NETWORKS without prior notice.

millbeck.co.uk

SIDE VIEW

The figure below depicts the measurements of device and its components as seen from the side:

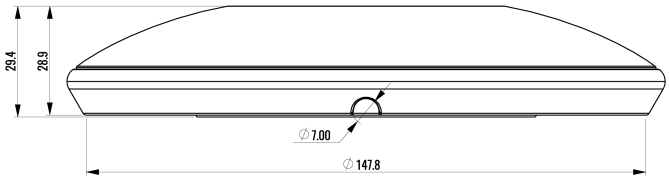

MOUNTING SPACE REQUIREMENTS

The figure below depicts an approximation of the device's dimensions when cables and antennas are attached:

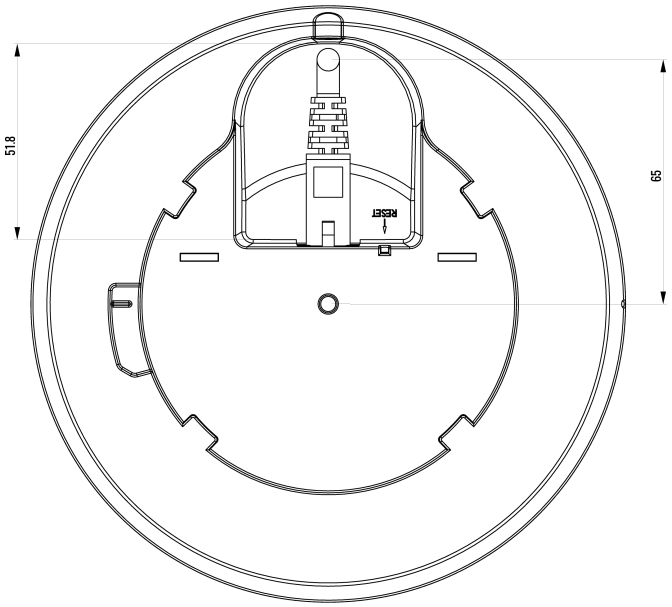

Copyright © 2026, UAB TELTONIKA NETWORKS.
Specifications and information provided in this document are subject to change by UAB TELTONIKA NETWORKS without prior notice.

millbeck.co.uk

RMS

REMOTE MANAGEMENT SYSTEM



UNIFIED ENTERPRISE CONTROL. SIMPLIFIED.

One Integrated Ecosystem

Your complete networking solution: TAP Access Points, SWM/TSW Switches, and the power of RMS – all working together on one secure platform.

– Vendor-Neutral Management: RMS manages Teltonika and 3rd-Party networking devices from a single platform.

– No Hardware Controllers: Save cost and complexity. Manage everything through RMS or local OS.

– Enterprise OS: RutOS & TswOS come with built-in VPN, VLAN/QoS, enhanced security, and powerful automation tools.

Unmatched Remote power

– RMS Access Included: Get two years of free remote monitoring and configuration immediately upon purchase.

– Interactive Network Map: Visual 2D topology for faster diagnostics and configuration directly from the map.

– Extend Your Reach: Securely access any device behind your network through RMS Connect (cameras, PLCs, servers, etc.) extending management beyond our hardware.

Copyright © 2026, UAB TELTONIKA NETWORKS.
Specifications and information provided in this document are subject to change by UAB TELTONIKA NETWORKS without prior notice.

millbeck.co.uk

Millbeck.

ABOUT

Millbeck brings over 20 years of connectivity expertise, delivering smart, secure IoT solutions that scale seamlessly, from UK based projects to global deployments.

As a Teltonika Diamond Partner, we combine global IoT SIM coverage, industrial-grade hardware, and expert support to deliver scalable, future-ready systems tailored to your exact needs.

TIMELINE

2002 — MILLBECK FOUNDED
Founded to provide data solutions to SMEs

2008 — FIRST IOT SIM SOLUTION PROVIDED
Cellular SIM solutions commence

2018 — ROAMING IOT SIMS LAUNCHED
The next step in IoT connectivity begins

2024 — TELTONIKA DIAMOND PARTNER
Millbeck solidify position as a key Teltonika partner

2025 — 5000+ CUSTOMERS CONNECTED
Continued growth in IoT Connectivity

EXPERTISE

- Routers
- Antennas
- Networking
- IoT SIMs
- IoT Consultancy

SIM TECHNOLOGIES

- 2G/3G, 4G LTE, 5G, CAT-M1, LTE-M, VoLTE & NB-IoT
- eUICC
- eSIM
- Fixed Public IP
- Fixed Private IP
- IPSec VPN
- SSL VPN

sales@millbeck.co.uk - 0113 548 0770 - millbeck.co.uk

Millbeck.

Industry sectors we connect

- Agriculture
- Construction
- BMS & Smart Cities
- Energy & Utilities
- Healthcare
- EV Charging
- Industrial IoT
- Retail & Point of Sale
- Security
- Automotive & Logistics

sales@millbeck.co.uk - 0113 548 0770 - millbeck.co.uk

Millbeck.

SIM & Hardware vendors

TELTONIKA

PROroute

2J antennas

PANORAMA ANTENNAS

POYNTING

DrayTek

QuWireless

OV

kpn IoT

EE

vodafone

O2

sales@millbeck.co.uk – 0113 548 0770 – millbeck.co.uk

Millbeck.



sales@millbeck.co.uk – 0113 548 0770 – millbeck.co.uk