TAP400

WI-FI 6 ACCESS POINT



Enterprise

Retail

Smart city

WI-FI 6

Robust wireless network for optimal multi-user efficiency

CENTRALISED CONTROL

Configure, monitor, and troubleshoot remotely via RMS

WI-FI MANAGEMENT

Manage multiple devices and visualize your setup with the network map

ALWAYS-ON COVERAGE

Stay online and extend coverage with Fast Roaming and Mesh

Copyright © 2026, UAB TELTONIKA NETWORKS.
Specifications and information provided in this document are subject to change by UAB TELTONIKA NETWORKS without prior notice.

millbeck.co.uk

Site Manager	
Supported modes	Managed Device
Functionalities	FOTA updates, device status reporting, automatic reboot via ping/wget health checks, centralized wireless SSID configuration

Wireless	
Wireless mode	802.11b/g/n/ac/ax (Wi-Fi 6) with data transmission rates up to 2402 Mbps on 5GHz and 576 Mbps on 2.4GHz (Dual Band, MU-MIMO), 802.11r fast transition, Access Point (AP)
Wi-Fi security	WPA2-Enterprise: PEAP, WPA2-PSK, WPA-EAP, WPA-PSK, WPA3-SAE, WPA3-EAP, OWE; AES-CCMP, TKIP, Auto-cipher modes, client separation, EAP-TLS with PKCS#12 certificates, disable auto-reconnect, 802.11w Protected Management Frames (PMF)
SSID/ESSID	SSID stealth mode and access control based on MAC address
Wi-Fi users	Up to 512 simultaneous connections
Wireless Connectivity Features	Wireless mesh (802.11s), fast roaming (802.11r), BSS transition management (802.11v), radio resource measurement (802.11k)
Wireless MAC filter	Allowlist, blocklist
Wireless QR code generator	Once scanned, a user will automatically enter your network without needing to input login information
TravelMate	Forward Wi-Fi hotspot landing page to a subsequent connected device

Ethernet	
Ethernet	1 x RJ45 port 100/1000/2500 Mbps, compliance with IEEE 802.3, IEEE 802.3u, 802.3az standards, supports auto MDI/MDIX crossover

Network	
Network protocols	TCP, UDP, ICMP, GRE, ESP, RIP, OSPF, BGP, IPsec, IPv4, IPv6, ARP, IPsec, PPP, HTTP, TTPS
Connection monitoring	Ping Reboot, Wget Reboot, Periodic Reboot, LCP and ICMP for link inspection
DNS over HTTPS	DNS over HTTPS proxy enables secure DNS resolution by routing DNS queries over HTTPS
Hotspot 2.0	Hotspot 2.0 is a Wi-Fi standard that enables seamless, secure, and automatic connection to trusted wireless networks
Traffic Management	Real-time monitoring, wireless signal charts, traffic usage history

Security	
Authentication	SSH key based, HTTPS, CLI, IP & Login attempts block, time-based login blocking, built-in random password generator
VLAN	Tag-based VLAN separation
Access control	Flexible access control of SSH, Web interface, CLI and Telnet
Certificate Manager	Certificate creation tool allows to create CA, server, client, let's encrypt, SCEP certificates
802.1x	Port-based network access control client

Copyright © 2026, UAB TELTONIKA NETWORKS.
Specifications and information provided in this document are subject to change by UAB TELTONIKA NETWORKS without prior notice.

millbeck.co.uk

Data to Server	
Protocol	HTTP(S), MQTT, Azure MQTT
Data to server	Extract parameters from multiple sources and different protocols, and send them all to a single server; Custom LUA scripting, allowing scripts to utilize the router's Data to server feature

API	
Teltonika Networks Web API (beta) support	Expand your device's possibilities by using a set of configurable API endpoints to retrieve or change data. For more information, please refer to this documentation: https://developers.teltonika-networks.com

Monitoring & Management	
WEB UI	HTTP/HTTPS, status, configuration, FW update, CLI, troubleshoot, multiple event log servers, firmware update availability notifications, event log, system log, kernel log
FOTA	Firmware update from server, automatic notification
SSH	SSH (v1, v2)
Email	Receive email message status alerts of various services
JSON-RPC	Management API over HTTP/HTTPS
Wi-Fi Scanner	Wi-Fi Scanner scans and collects information about wireless devices in surrounding area
RMS	Teltonika Remote Management System (RMS)

System Characteristics	
CPU	Mediatek, Dual-Core, 1.3 Ghz
RAM	512 MB, DDR3
FLASH storage	16MB SPI NOR Flash, 512MB SPI NAND Flash

Firmware/Configuration	
WEB UI	Update FW from file, check FW on server, configuration profiles, configuration backup
FOTA	Update FW
RMS	Update FW/configuration for multiple devices at once
Keep settings	Update FW without losing current configuration
Factory settings reset	A full factory reset restores all system settings, including the IP address, PIN, and user data to the default manufacturer's configuration

FIRMWARE CUSTOMISATION	
Operating system	RutOS (OpenWrt based Linux OS)
Supported languages	Busybox shell, Lua, C, C++
Development tools	SDK package with build environment provided
GPL customization	You can create your own custom, branded firmware and web page application by changing colours, logos, and other elements in our firmware to fit your or your clients' needs

Copyright © 2026, UAB TELTONIKA NETWORKS.
Specifications and information provided in this document are subject to change by UAB TELTONIKA NETWORKS without prior notice.

millbeck.co.uk

Power	
Connector	RJ45 Socket
Input voltage range	44.0 – 57.0 V, surge protection >64.4 VDC 10us max
PoE standards	802.3af PoE Class 3
Power consumption	Idle: < 7 W / Max: < 11 W

Physical Interfaces	
Ethernet	1 x RJ45 port, 100/1000/2500 Mbps
Status LEDs	1 x Power LED (can be turned off from web-UI)
Antennas	3 x Internal for 2.4 GHz Wi-Fi and 5 GHz Wi-Fi antennas
Antennas specifications	3x 2400 - 2500 MHz, peak gain < 4.33 dBi & 5150 - 5850 MHz, peak gain < 4.9 dBi, omnidirectional
Reset	Reboot/User default reset/Factory reset button

Physical Specification	
Casing material	UV stabilized plastic, aluminum
Dimensions (W x H x D)	Ø 158 mm x 31.4 mm
Weight	285 g
Mounting options	AP mounting bracket (for ceiling mount)

Operating Environment	
Operating temperature	0 °C to 50 °C
Operating humidity	10% to 90% non-condensing
Ingress Protection Rating	IP30

Copyright © 2026, UAB TELTONIKA NETWORKS.
Specifications and information provided in this document are subject to change by UAB TELTONIKA NETWORKS without prior notice.

millbeck.co.uk

Certification

EMEA	TAP400 CE TAP400 UKCA TAP400 RoHS TAP400 REACH
AMERICAS	TAP400 FCC TAP400 IC(ISED)
MISCELLANEOUS	TAP400 CB Scheme
SAFETY & ENVIROINMENTAL	TAP400 WEEE

Copyright © 2026, UAB TELTONIKA NETWORKS.
Specifications and information provided in this document are subject to change by UAB TELTONIKA NETWORKS without prior notice.

millbeck.co.uk

Hardware

FRONT VIEW

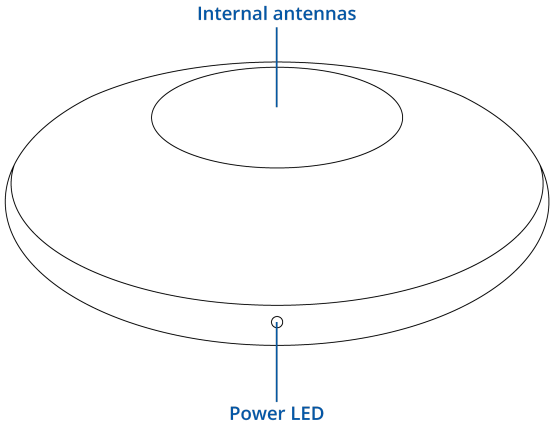

BOTTOM VIEW

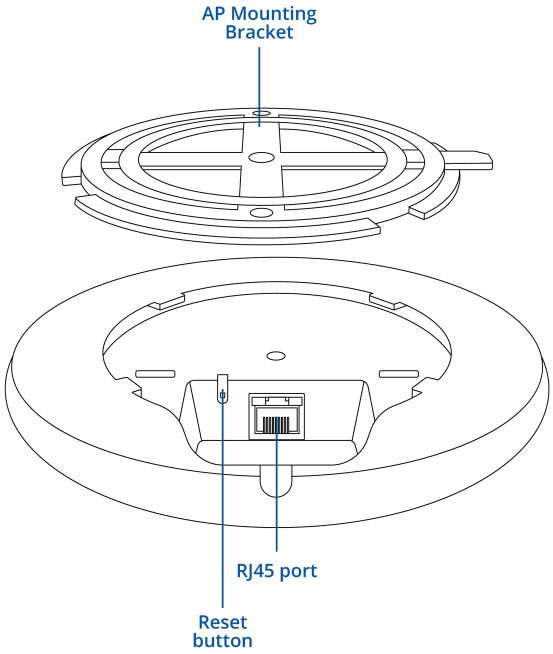

RJ45 LED MEANING

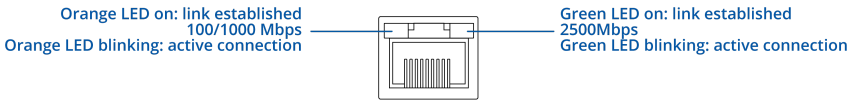

Copyright © 2026, UAB TELTONIKA NETWORKS.
Specifications and information provided in this document are subject to change by UAB TELTONIKA NETWORKS without prior notice.

millbeck.co.uk

Ordering

Standard package*



TAP400



QUICK START GUIDE

*Standard package contents may differ based on standard order codes.

For more information on all available packaging options – please contact us directly.

Copyright © 2026, UAB TELTONIKA NETWORKS.
Specifications and information provided in this document are subject to change by UAB TELTONIKA NETWORKS without prior notice.

millbeck.co.uk

Classification codes

HS Code: 851762
HTS: 8517.62.00

For more information on all available packaging options – please contact us directly.

Available versions

Hardware version	Supported frequencies	Standard order code / Package Contains
TAP400 ******		TAP400000000 / Standard package

TAP400 spatial measurements

Available versions

Box:	175 x 165 x 34 mm
Device housing:	Ø 158 mm x 31.4 mm
	*Housing measurements are presented without antenna connectors and screws; for measurements of other device elements look to the sections below

Copyright © 2026, UAB TELTONIKA NETWORKS.
Specifications and information provided in this document are subject to change by UAB TELTONIKA NETWORKS without prior notice.

millbeck.co.uk

TOP VIEW

The figure below depicts the measurements of device and its components as seen from the top:

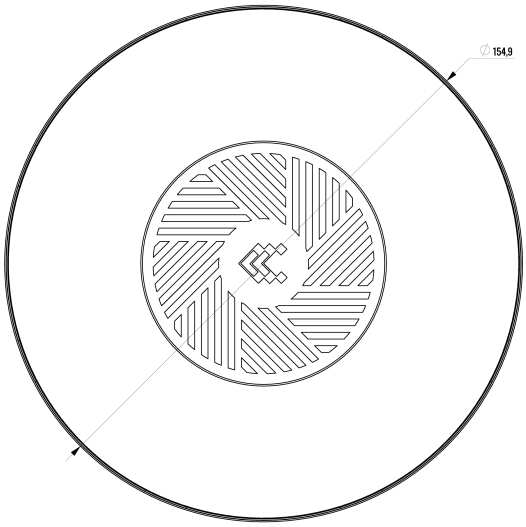

BOTTOM VIEW

The figure below depicts the measurements of device and its components as seen from the bottom side:

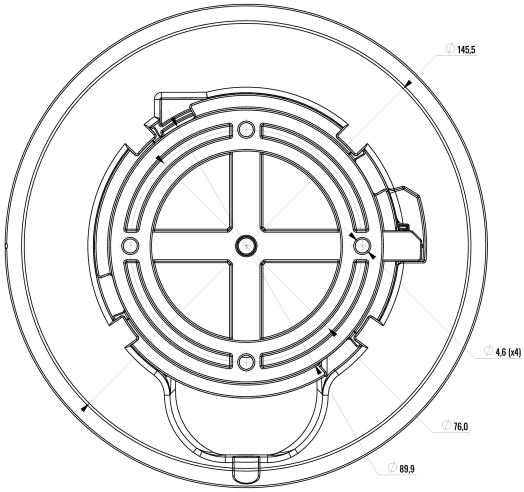

SIDE VIEW

The figure below depicts the measurements of device and its components as seen from the side:

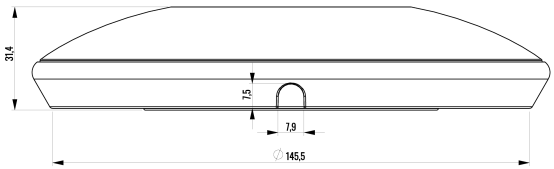

Copyright © 2026, UAB TELTONIKA NETWORKS.
Specifications and information provided in this document are subject to change by UAB TELTONIKA NETWORKS without prior notice.

millbeck.co.uk

MOUNTING SPACE REQUIREMENTS

The figure below depicts an approximation of the device's dimensions when cables and antennas are attached:

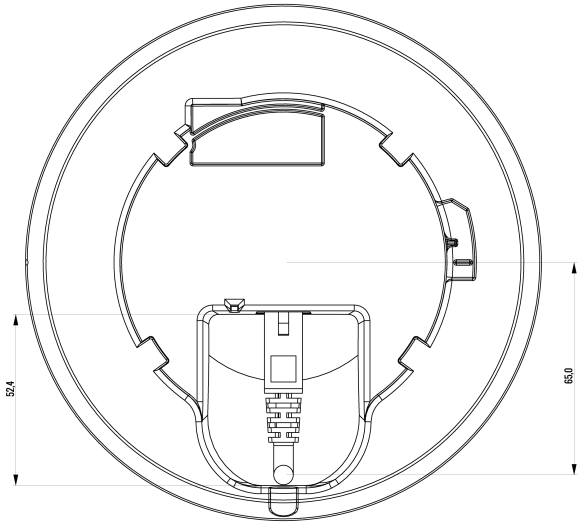

Copyright © 2026, UAB TELTONIKA NETWORKS.
Specifications and information provided in this document are subject to change by UAB TELTONIKA NETWORKS without prior notice.

millbeck.co.uk

RMS

REMOTE MANAGEMENT SYSTEM



UNIFIED ENTERPRISE CONTROL. SIMPLIFIED.

One Integrated Ecosystem

Your complete networking solution: TAP Access Points, SWM/TSW Switches, and the power of RMS – all working together on one secure platform.

– Vendor-Neutral Management: RMS manages Teltonika and 3rd-Party networking devices from a single platform.

– No Hardware Controllers: Save cost and complexity. Manage everything through RMS or local OS.

– Enterprise OS: RutOS & TswOS come with built-in VPN, VLAN/QoS, enhanced security, and powerful automation tools.

Unmatched Remote power

– RMS Access Included: Get two years of free remote monitoring and configuration immediately upon purchase.

– Interactive Network Map: Visual 2D topology for faster diagnostics and configuration directly from the map.

– Extend Your Reach: Securely access any device behind your network through RMS Connect (cameras, PLCs, servers, etc.) extending management beyond our hardware.

Copyright © 2026, UAB TELTONIKA NETWORKS.
Specifications and information provided in this document are subject to change by UAB TELTONIKA NETWORKS without prior notice.

millbeck.co.uk

Millbeck.

ABOUT

Millbeck brings over 20 years of connectivity expertise, delivering smart, secure IoT solutions that scale seamlessly, from UK based projects to global deployments.

As a Teltonika Diamond Partner, we combine global IoT SIM coverage, industrial-grade hardware, and expert support to deliver scalable, future-ready systems tailored to your exact needs.

TIMELINE

2002 — MILLBECK FOUNDED
Founded to provide data solutions to SMEs

2008 — FIRST IOT SIM SOLUTION PROVIDED
Cellular SIM solutions commence

2018 — ROAMING IOT SIMS LAUNCHED
The next step in IoT connectivity begins

2024 — TELTONIKA DIAMOND PARTNER
Millbeck solidify position as a key Teltonika partner

2025 — 5000+ CUSTOMERS CONNECTED
Continued growth in IoT Connectivity

EXPERTISE

- Routers
- Antennas
- Networking
- IoT SIMs
- IoT Consultancy

SIM TECHNOLOGIES

- 2G/3G, 4G LTE, 5G, CAT-M1, LTE-M, VoLTE & NB-IoT
- eUICC
- eSIM
- Fixed Public IP
- Fixed Private IP
- IPSec VPN
- SSL VPN

sales@millbeck.co.uk - 0113 548 0770 - millbeck.co.uk

Millbeck.

Industry sectors we connect

- Agriculture
- Construction
- BMS & Smart Cities
- Energy & Utilities
- Healthcare
- EV Charging
- Industrial IoT
- Retail & Point of Sale
- Security
- Automotive & Logistics

sales@millbeck.co.uk - 0113 548 0770 - millbeck.co.uk

Millbeck.

SIM & Hardware vendors

TELTONIKA

PROroute

2J antennas

PANORAMA ANTENNAS

POYNTING

DrayTek

QuWireless

OV

kpn IoT

EE

vodafone

O2

sales@millbeck.co.uk – 0113 548 0770 – millbeck.co.uk

Millbeck.



sales@millbeck.co.uk – 0113 548 0770 – millbeck.co.uk