Access Reader

ID ACCESS 2500



PRODUCT DESCRIPTION

The ID ACCESS 2500 access reader is an RFID reader specially developed for use in access control. It supports the common Wiegand and RS485 output interfaces and can be easily integrated into existing access systems.

In addition to reading card numbers, the ID ACCESS 2500 also allows read and write operations on MIFARE cards and the processing of APDU commands, which also enables its use with CPU cards.

For authentication, the reader offers PSAM card support, making it particularly suitable for security-critical applications. The ID ACCESS 2500 is the optimal solution for modern access control systems in commercial, industrial, or institutional applications.

APPLICATIONS

- **Public buildings / Administrative offices**
- **Schools & Universities**
- **Residential complexes & Parking systems**
- **Industrial plants**

FEATURES

- **PSAM card support**
- **Fast read speed**
- **Wiegand or RS485 Interfaces**
- **Integrated LED indicators and audible feedback**
- **MIFARE RFID Reader (HF | NFC 13,56 MHz)**

PRODUCT IMAGES





iDTRONIC GmbH
Ludwig-Reichling-Straße 4
67059 Ludwigshafen
GERMANY

Tel:+49 (0)621 66 900 94-0
Mail: info@idtronic.de
Web: idtronic.de

Subject to change without notice.
©2025 iDTRONIC GmbH

TECHNICAL SPECIFICATIONS

TECHNICAL SPECIFICATIONS	
Frequency	13,56 MHz
Operating voltage	5 - 15V DC
Power consumption	150 mA at 12 V
Reading distance	< 5 cm (depending on card type and environmental conditions)
Acoustic signal	Integrated buzzer
Light signal	LED
Interface	RS485, Wiegand 26 / 34
Operating temperature	-20°C up to 70°C
Storage temperature	-20°C up to 70°C
Humidity	5% - 95% (Non condensing)

*No metal or magnetic material within 10 cm of the antenna to ensure optimal reading performance

MECHANICAL SPECIFICATIONS	
Dimensions	100,60 × 100,60 × 16,85mm

SUPPORTED STANDARDS / TAGS	
ISO 14443 A and compatible	Read/write: MIFARE® Classic/1K/4K, MIFARE Ultralight®/C, MIFARE® DESFire®EV1/3, MIFARE® Smart MX, MIFARE® Plus S / X, MIFARE® Pro X, Fudan FM08, NFC, NTAG 213, 215, 216, 196, DNA
ISO 14443 B and compatible	SRI4K, SRIX4K, AT88RF020, 66CL160S, SR176
Operation card mode	Read UID, read and write M1 card sector, PSAM authentication

DIMENSIONS

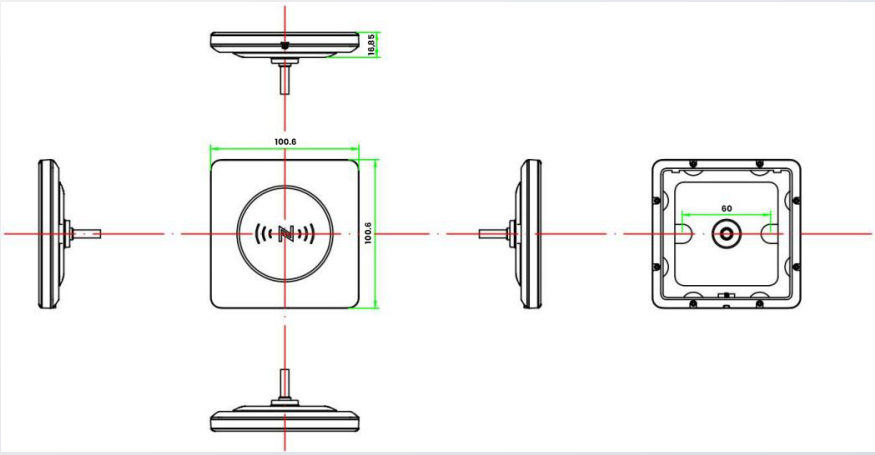

ORDER CODES

VERSIONS	ORDER CODES
ID Access 2500 Wiegand	R-EA-WR-ID-2500-WG
ID Access 2500 RS485	R-EA-WR-ID-2500-RS

iDTRONIC GmbH
Ludwig-Reichling-Straße 4
67059 Ludwigshafen
GERMANY

Tel:+49 (0)621 66 900 94-0
Mail: info@idtronic.de
Web: idtronic.de

Subject to change without notice.
©2025 iDTRONIC GmbH