AVERA 48

The Avera 48 fire pit is handmade by Dekko in North America. Ships with your choice of NG or LP burner, one decorative aggregate option and chrome On/Off key.

Size: 48”W x 25-3/4”D x 16”H
CSA/UL Approved Burner Assembly

C US

	Manual Ignition	Electronic Ignition
BTU/Hr	65,000	115,000
Weight	145 lbs	145 lbs
Fuel Options	NG/LP	NG/LP

Optional Accessories:

Propane Tank Cover 16”W x 16”D x 21”H

Glass Wind Guard 43”W 15”D x x 6”H

Vinyl Weather Cover

Powder Coated Aluminium Table Top 48”W x 25-3/4”D

Colour Options

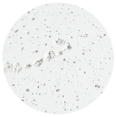
NATURAL

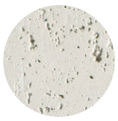
LIMESTONE

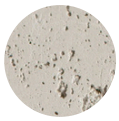
CLAY

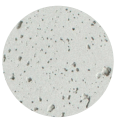
ASH

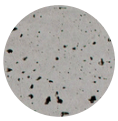
SANDSTONE

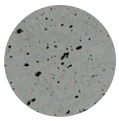
CHARCOAL

Decorative Aggregate Options

IVORY BEACH STONE

SLATE BEACH STONE

BLACK LAVA ROCK

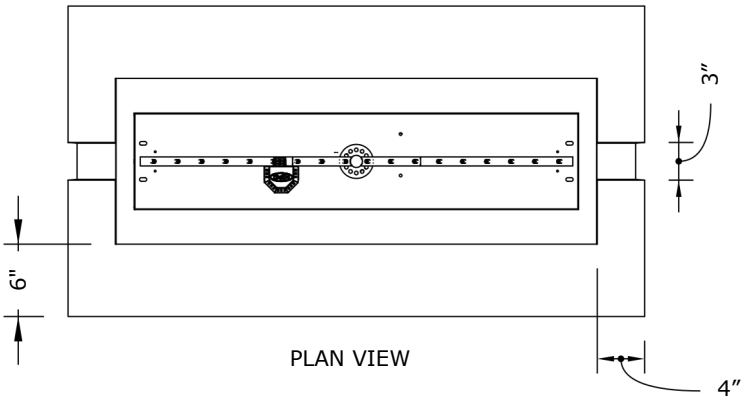

PLAN VIEW

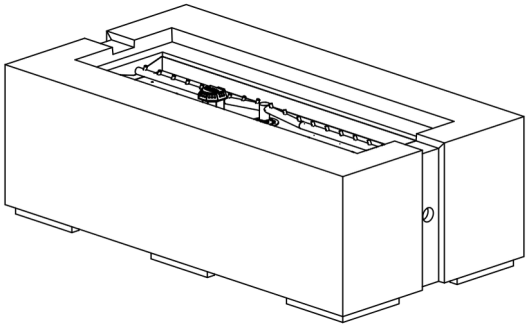
ISOMETRIC

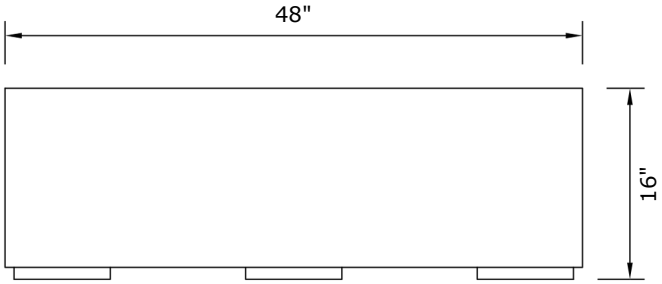

FRONT ELEVATION

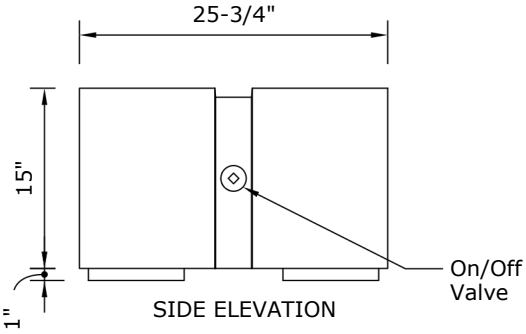

SIDE ELEVATION

Clearances

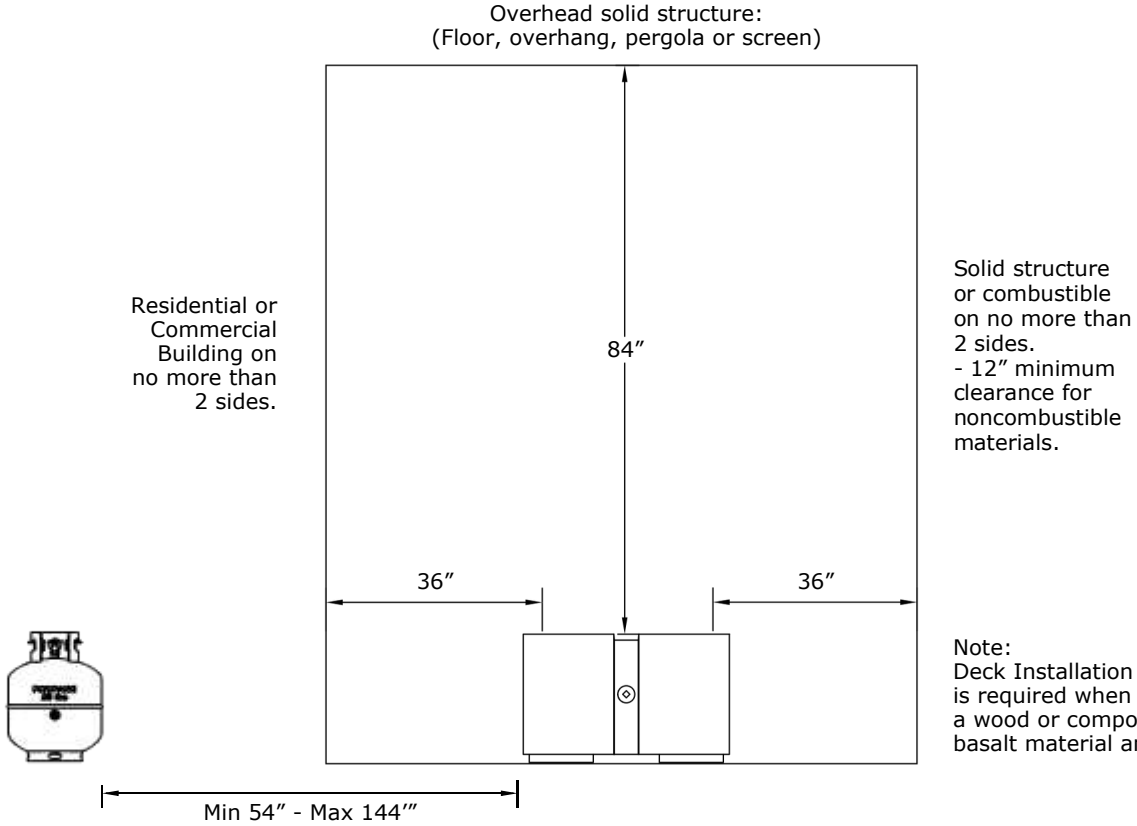

Note:
Deck Installation - a deck insulation kit is required when installing the fire pit on a wood or composite deck. Kit includes basalt material and instructions.

Burner Assembly

37″ Match Lit Burner

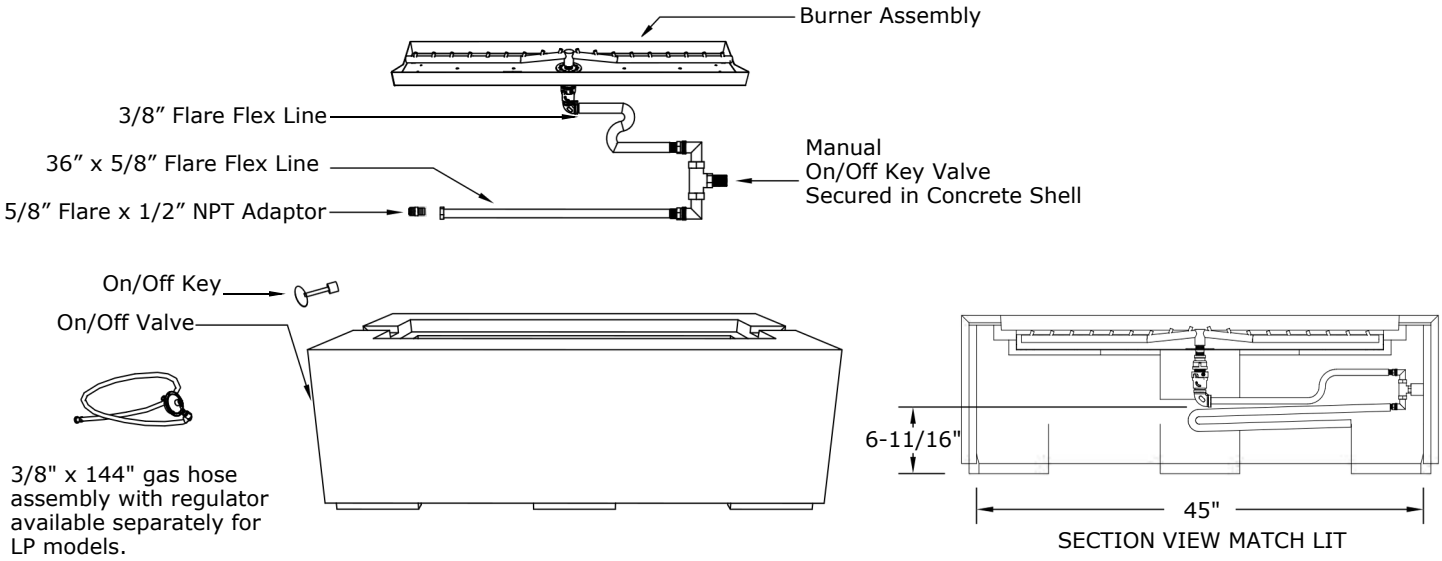

Clearances

Overhead solid structure:
(Floor, overhang, pergola or screen)

Residential or Commercial Building on no more than 2 sides.

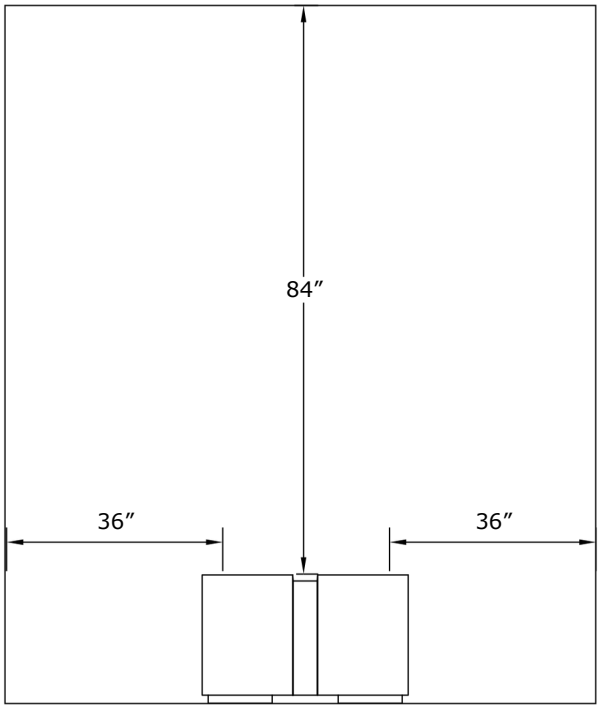

Solid structure or combustible on no more than 2 sides.
- 12” minimum clearance for noncombustible materials.

Note:
Electronic ignition burners require a fixed piping gas supply. Not for use with portable LP tanks.

Note:
Deck Installation - if installing fire pit on a wood or composite deck, it is required to use the deck insulation kit. Kit includes basalt material and instructions.

Burner Assembly

Electrical: 120V Outdoor receptacle required. Must be installed and grounded in accordance with local codes.

37” Electronic Ignition Burner

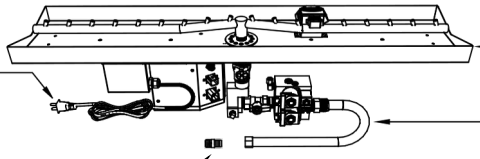

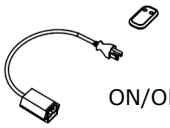

ON/OFF remote control included with Electronic Ignition models

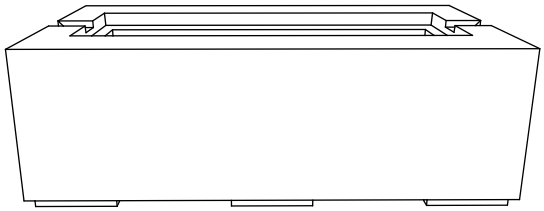

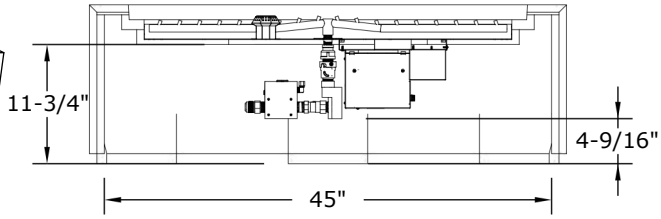

SECTION VIEW ELECTRONIC IGNITION