Viper™

3 Flavor Frozen Dispenser - **Tall**

Specification Guide

VIPER™

Features

High Capacity
Surge capacity dispensing 10 (16oz) consecutive drinks per barrel with a continuous draw capacity of 75-82 fl.oz per minute

Patented Intelligent Defrost™
Manages product quality and bypasses unnecessary defrost times

Defrost Lock-Out Times
Schedule defrost lockout times to avoid down time during peak demand periods

Sleep Mode
Schedule sleep modes to conserve energy during off hours

Remote Condenser
Remote and air-cooled condenser options available

QR Code
Quickly access service manuals and easy-to-follow training videos

C3 Technology
Cooling, carbonation, and controls provide unmatched drink profile consistency and minimizes syrup usage

Serviceability
Reduced maintenance and service times with a 0.3% out of the box failure rate

Programmable Flavor Barrels
Individual barrel flexibility and profile settings

ADA Compliant
Stainless push handle valve

Marmon Foodservice Technologies

Viper™
3 Flavor Frozen Dispenser - **Tall**

Specification Guide

Technical Specifications

Electrical Requirements	230V +/- 15V 60Hz, 30a, Single Phase
	230V +/- 15v 50Hz, 30a, Single Phase
	Includes 8ft. power NEMA L6-30P molded plug connection. Part Numbers ending in "EU" and 50HZ SKU's include 8ft. power cord IEC60309 32Amp molded plug connections - Part numbers ending in "AU" include 56PA332 plug
Pressure Requirements	CO2 = 75 psig Water = 25 min psig dynamic
Draw Capacity	75-82 oz/min continuous, alternating barrels @ 75° F (24°C)
Refrigeration	19,000 BTU, R404A
Minimum Clearance Requirements	Top: 12" (305mm) Both Sides: 2" (51mm) -or- Back: 2" (51mm) *for temperatures < 90°F (32°C)*
Unit Dimensions	22.75"W x 32.5"D x 43.7"H (577.85mm x 825.5mm x 1109.98mm)
Graphic Card Dimensions	22.5"W x 18.75"H (571.5mm x 8.5mm)
Flavor Card Dimensions	6.5"W x 4"H (165.1mm x 101.6mm)
Unit Weight	445lbs (201.8kg)
Shipping Weight	Unit: 465lbs (210.92kg) Cart: 175lbs (79.39kg)
Agency Listing	60 Hz c UL us LISTED, NSF, CE
	50 Hz NSF, CE

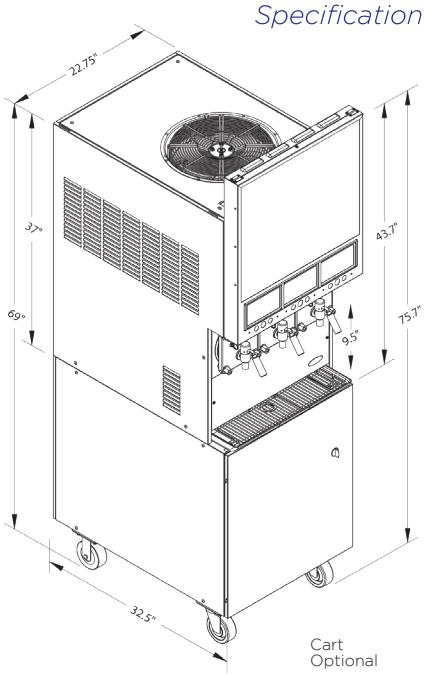

Model Number	Description
621360142	Viper 3 Barrel, 60Hz, R404A, Air Cooled, Stainless Push Handle Valve (SPH), Tall Merchandiser, N. American Power Cord
621360042	Viper 3 Barrel, 60Hz, R404A, Air Cooled, Motorman Valve, Tall Merchandiser, N. American Power Cord
621350042	Viper 3 Barrel, 50Hz, R404A, Air Cooled, Motorman Valve, Tall Merchandiser, IEC Power Cord
621360142EU	Viper 3 Barrel, 60Hz, R404A, Air Cooled, Motorman Valve, Tall Merchandiser, IEC Power Cord
621362142	Viper 3 Barrel, 60Hz, R404A, Remote Condensing Dispenser, Stainless Push Handle Valve (SPH), Tall Merchandiser, N. American Power Cord*

Not all configurations are available – please contact a Cornelius® expert for additional information
For FUB, Motorman Valves are recommended
*Note: When ordering the **Remote Condensing Dispenser**, the corresponding accessory below (marked with[1]) must also be ordered. Additionally, one of the 2 line set options (marked with**) must also be ordered*

*This equipment is **prohibited** from use in California in accordance with the **California Code of Regulations, title 17, section 95374** and in Colorado, Delaware, Maryland, Massachusetts, New Jersey, New York, Vermont, and Washington and is expected to be prohibited in Virginia by July 1, 2021. This disclosure statement has been reviewed and approved by Marmon Foodservice Technologies, and Marmon Foodservice Technologies attests, under penalty of perjury, that these statements are true and accurate. Consider Viper™ equipment with R448A refrigerant, if available.*

Accessories Number	Description
629087406	Leg kit, 4" legs adjustable to 5.25"
620053990	Viper 3 barrel cart, stainless steel
620046410	Viper 3 barrel generic graphic for tall merchandiser
620042868	Generic flavor card set (includes 18 flavors)
620051378	Coke flavor card set
620051379	Pepsi flavor card set
620067479	Pre-wired buck boost transformer
620067108	Remote condenser unit[1]
620071967	50ft Line Set (1) 3/8" and (1) 1/2"**
620071969	100ft Line Set (1) 3/8" (1) 1/2**
629096928	Viper 3 barrel installation kit
621058482	Viper 3 barrel pre-plumbed cart
326002000	Drain kit for drip tray

Refer to Installation Manual for required installation materials - A Buck/Boost transformer is recommended for most installations
*Note: When ordering the **Remote Condensing Dispenser**, the corresponding accessory above (marked with[1]) must also be ordered. Additionally, one of the 2 line set options (marked with**) must also be ordered.*

To learn more and see **Viper™** in action, visit cornelius.com
To contact a Cornelius® expert today, visit cornelius.com/contact-us

©2021 Marmon Foodservice Technologies, Inc. 052421.3

Marmon Foodservice Technologies