INSTALLATION INSTRUCTIONS

DF/ED 2XX Ice Maker Adapter Kit for Hoshizaki F-1001 Series Ice Maker

WARNING:
Disconnect power to the unit before installing the adaptor following all lockout/tag out procedures established by the user. Verify that all the power is off to the unit before performing any work.

Failure to comply could result in serious injury, death or damage to the equipment.

WARNING:
All ice baffle plates and bin stats, if included or recommended in this kit, must be installed as directed in this manual or the equipment manufacturer's instructions.

Failure to comply could result in serious injury, death or damage to the equipment.

WARNING:
All of the attachment screws and plates must be installed as directed in this manual.

Failure to comply could result in serious injury, death or damage to the equipment.

1. Remove the plastic hopper lids from the top of the dispenser.
2. Install ice slide kit (*sold separately*) into the dispenser hopper.

NOTE: This soft ice agitator kit is required for proper dispenser operation using "compressed" or "soft" ice types. Failure to install this kit may result in undesirable beverage quality.

3. Unpack and inspect the adapter kit.
4. Assemble the baffle assembly onto the adapter lid as shown in Figure 1.

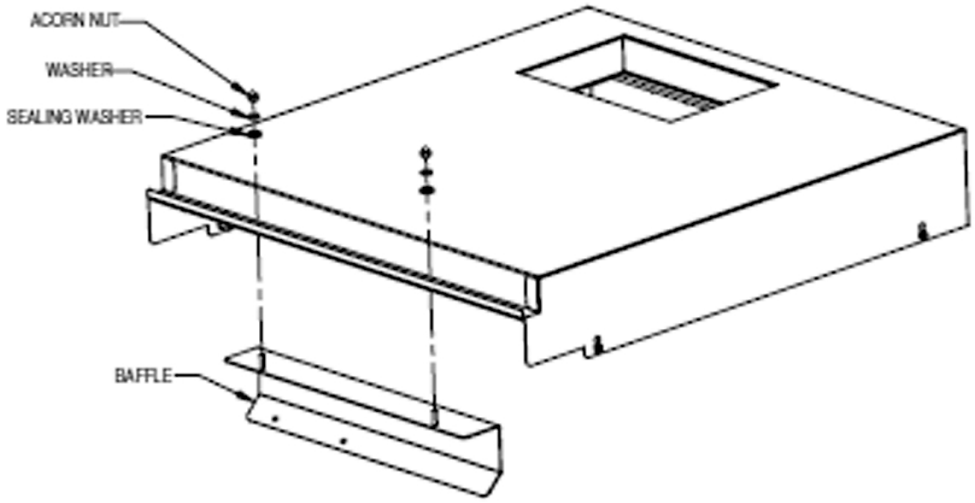

Figure 1.

5. Set and secure adapter lid onto the dispenser as shown in Figure 2.

© 2007-2014, Cornelius Inc.

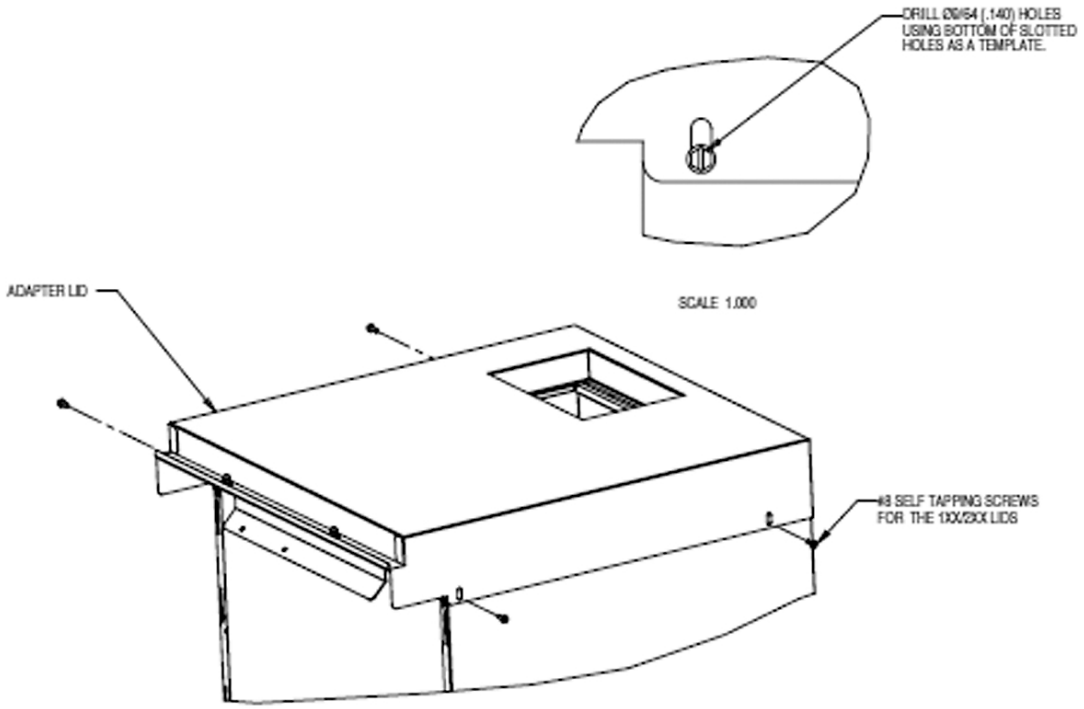

Figure 2.

6. Remove merchandiser from dispenser by lifting up then pulling out. Set merchandiser aside.
7. Adjust the automatic agitator timing settings (located in the dispenser's electrical box) to 2 seconds ON, 3 hours OFF. See Figure 3.

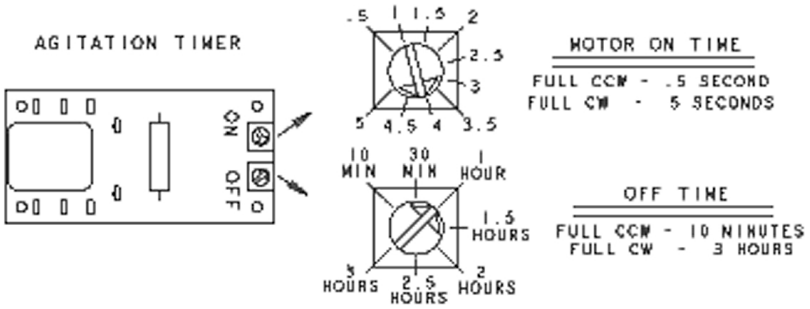

Figure 3.

8. Re-install merchandiser back onto the dispenser.
9. Set ice maker onto the adapter kit. See Figure 4 for location dimensions.

 © 2007-2014, Cornelius Inc.

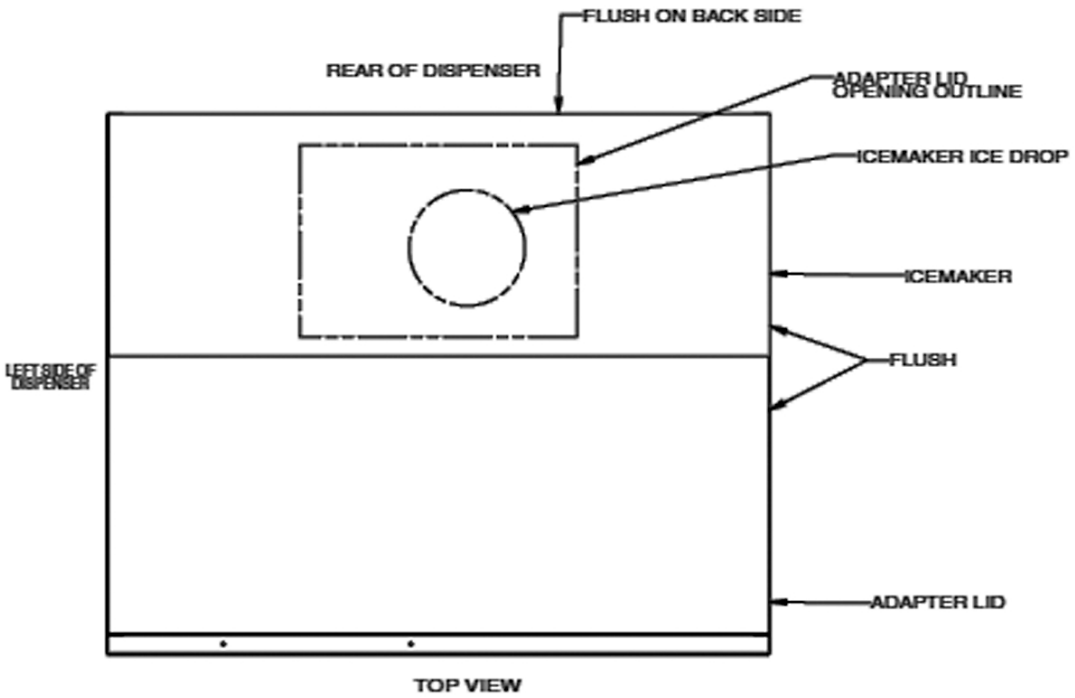

Figure 4.

10. Follow the ice maker manufacturing instructions to complete the installation of the ice maker.

NOTE: Failure to install a bin thermostat correctly may result in inadequate hopper fill, ice dispense issues, hopper "ice bridging", and/or possible damage to the ice maker.

11. Apply a continuous bead of NSF International (NSF) listed silastic sealant (Dow 732 or equivalent) to seal the ice maker to the top of the adapter lid. All excess sealant *must* be wiped away immediately.
12. Install the ice maker mounting brackets on the back of the ice maker by drilling 9/64" diameter holes, using one of the two supplied brackets as a template, into the rear of the ice maker and the rear of the adapter lid. **Use extreme care not to drill into any ice maker components.** Secure the ice maker to the adapter lid using the #8 self drilling and mounting brackets provided.
13. Re-connect electrical power to the dispenser.
14. Verify function and operation of both ice maker and dispenser.

© 2007-2014, Cornelius Inc.