ED200/250 “K”STYLE LID KITS

P/N 629097237, 629097239, 629097245

Installation Instructions

Release Date: June 25, 2014

Publication Number: 629097240INS

Revision: A

Visit the Cornelius web site at www.cornelius.com for all your Literature needs.

The products, technical information, and instructions contained in this manual are subject to change without notice. These instructions are not intended to cover all details or variations of the equipment, nor to provide for every possible contingency in the installation, operation or maintenance of this equipment. This manual assumes that the person(s) working on the equipment have been trained and are skilled in working with electrical, plumbing, pneumatic, and mechanical equipment. It is assumed that appropriate safety precautions are taken and that all local safety and construction requirements are being met, in addition to the information contained in this manual.

This Product is warranted only as provided in Cornelius' Commercial Warranty applicable to this Product and is subject to all of the restrictions and limitations contained in the Commercial Warranty.

Cornelius will not be responsible for any repair, replacement or other service required by or loss or damage resulting from any of the following occurrences, including but not limited to, (1) other than normal and proper use and normal service conditions with respect to the Product, (2) improper voltage, (3) inadequate wiring, (4) abuse, (5) accident, (6) alteration, (7) misuse, (8) neglect, (9) unauthorized repair or the failure to utilize suitably qualified and trained persons to perform service and/or repair of the Product, (10) improper cleaning, (11) failure to follow installation, operating, cleaning or maintenance instructions, (12) use of "non-authorized" parts (i.e., parts that are not 100% compatible with the Product) which use voids the entire warranty, (13) Product parts in contact with water or the product dispensed which are adversely impacted by changes in liquid scale or chemical composition.

Contact Information:

To inquire about current revisions of this and other documentation or for assistance with any Cornelius product contact:

www.cornelius.com

800-238-3600

Trademarks and Copyrights:

This document contains proprietary information and it may not be reproduced in any way without permission from Cornelius.

This document contains the original instructions for the unit described.

CORNELIUS INC
101 Regency Drive
Glendale Heights, IL
Tel: + 1 800-238-3600

Printed in U.S.A.

INSTALLATION INSTRUCTIONS

Safety Instructions

WARNING:
Before starting installation, read and understand all safety label and warnings on the machine. Also review and understand all safety instructions in the owners, installation and service manuals.

Failure to comply could result in serious injury, death or damage to the equipment.

Qualified Service Personnel

WARNING:
Only trained and certified electrical, plumbing and refrigeration technicians should service this unit.

All wiring and plumbing must conform to national and local codes. Failure to comply could result in serious injury, death or equipment damage.

Safety Precautions

This unit has been specifically designed to provide protection against personal injury. To ensure continued protection observe the following:

WARNING:
Disconnect power to the unit before servicing. Follow all lock out/tag out procedures established by the user. Verify all power is off to the unit before performing any work.

Failure to comply could result in serious injury, death or damage to the equipment.

CAUTION:
Always be sure to keep area around the unit clean and free of clutter.

Failure to keep this area clean may result in injury or equipment damage.

WARNING:
All ice baffle plates and bin stats, if included or recommended in this kit, must be installed as directed in this manual or the equipment manufacturer’s instructions.

Failure to comply could result in serious injury, death or damage to the equipment.

WARNING:
All of the attachment screws and plates must be installed as directed in this manual.

Failure to comply could result in serious injury, death or damage to the equipment.

© 2014, Cornelius Inc.

Publication Number: 629097240INS

NOTE: These “K” style kits apply to the following ice makers:

Ice Maker	Width
Manitowoc: Q450/200/600/800/1000	30 in.
Manitowoc: S300/S500/S850/S1000	30 in.

This adaptor kit is recommended for use with ED200/250 Dispensers and icemakers that measure 30” wide X 24.5” deep. The ice maker drop zone and bin stat must fit within the footprint shown in Figure 1.

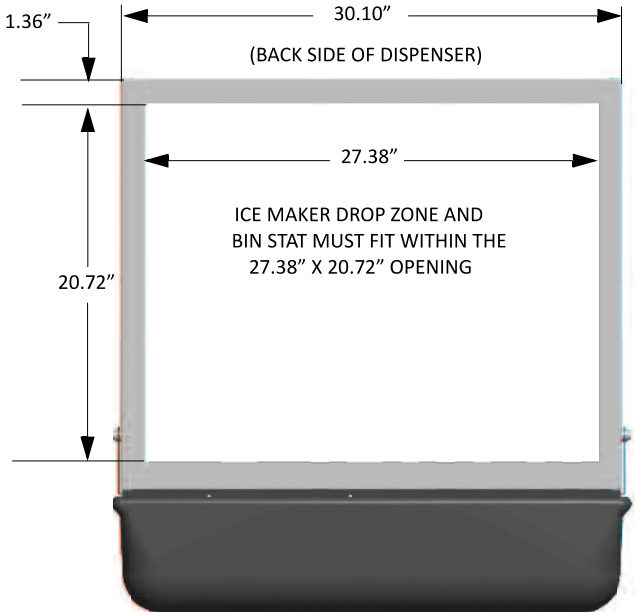

Figure 1

1. Unpack the kit.
2. Insert the baffle assembly into the adaptor kit.
3. Place two (2) sealing washers (item 9) over the studs and two (2) flat washers (item 11), then fasten in place with two (2) plastic acorn nuts (item 8).
4. Set the ice maker lid assembly on the top of the dispenser.
5. Using the four holes in the adaptor cover as templates, drill 9/64” (.140" Dia.) holes in the sides of the dispenser (2 holes per side). **Use extreme caution not to drill into any other components**. Maximum drill depth from the face of the kit should not exceed 3/8” (just enough to go through the material being drilled). Remember, the kit should be all the way forward and compressed down before drilling the holes. Otherwise, undesirable gaps (lid to merchandiser) may result and the internal latch feature for the lid may not function properly. After holes are drilled, secure the kit to the machine using the screws provided (refer to Figure 3).
6. Seal the ice maker to the top of the dispenser as follows:
   A. Run beads of RTV around the opening in the lid and inside of the perimeter of the ice maker outline so that the ice maker will set on the RTV.
   B. Set the ice maker onto the lid and position it as required.
   C. Wipe away the excess RTV.
7. Follow the ice maker manufacturers instruction to complete the installation of the ice maker including the bin thermostat if so equipped or required.
8. If the plastic acorn nuts interfere with the positioning of the plastic manual fill cover, it may be necessary to make small notches in the back flange of the cover to clear the acorn nuts.

 © 2014, Cornelius Inc.

9. Insert a nylon washer (Item 12) into the weld nut and assemble the cover assembly (620057410/620057232) and put another washer (Item 12) and then fasten by V-Screw (Item 14) and screw cover (Item 13) (refer to Figure 2).

NOTE: Bin Thermostat must not interfere with the agitator rotation

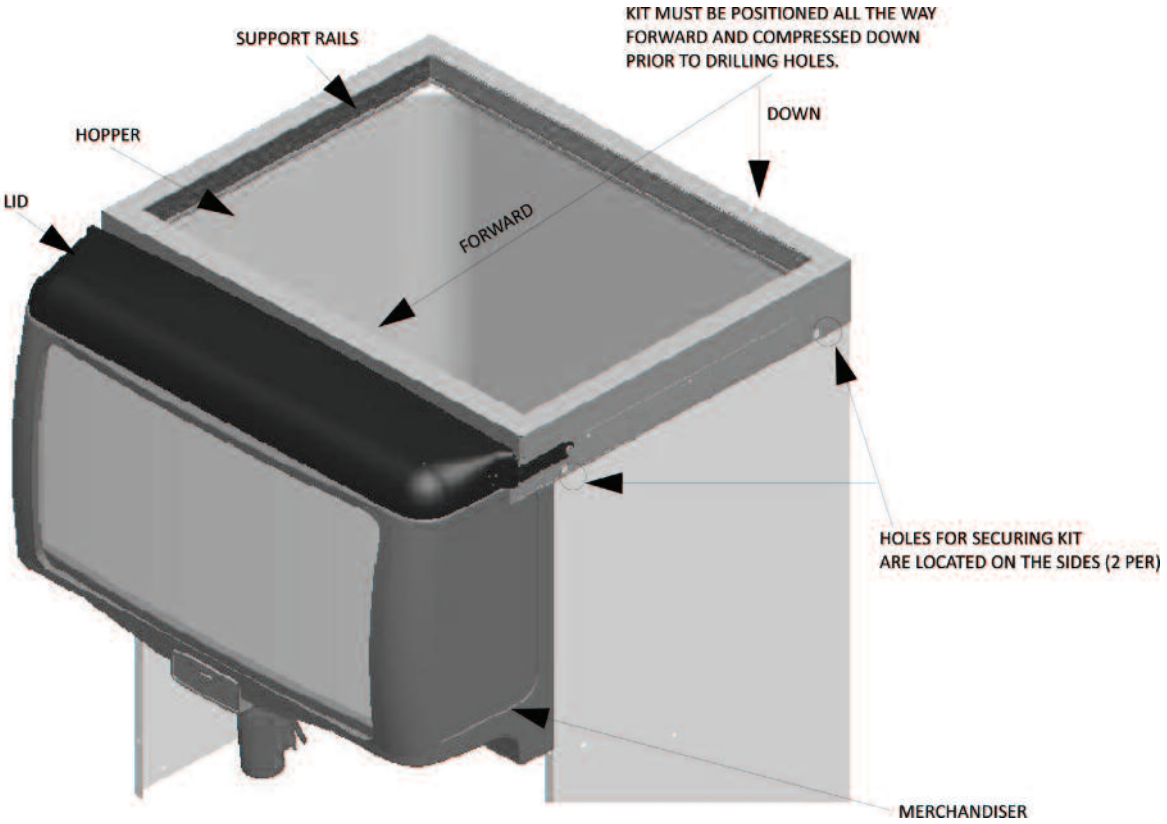

Figure 2

DISPENSER ASSEMBLY

Item No.	Part No.	Name	Qty.
1	620057410	Cover Assembly Gray – 629097239	1
	620057232	Cover Assembly Black – 629097237	1
	620057592	Cover Assembly Gray – 629097245	1
2	620057230	Frame Assembly	1
3	620027306	Bracket	2
4	70217	#8 Screw	6
5	50904	RTV	1
6	91957	Label	1
7	629097240INS	Installation Instruction	1
8	620701902	Acorn Nut, 8-32 Nylon	2
9	620701901	Sealing Washer	2
10	620042948	Baffle, Ice ED2XX	1
11	621701903	#8 Nylon Washer	2
12	110015000	Washer	4
13	620522941	Cover Hinged Screw (Black-MCMASTER- Carr PN:91620A200)	2
14	V25081	V- Screw Pan Head	2

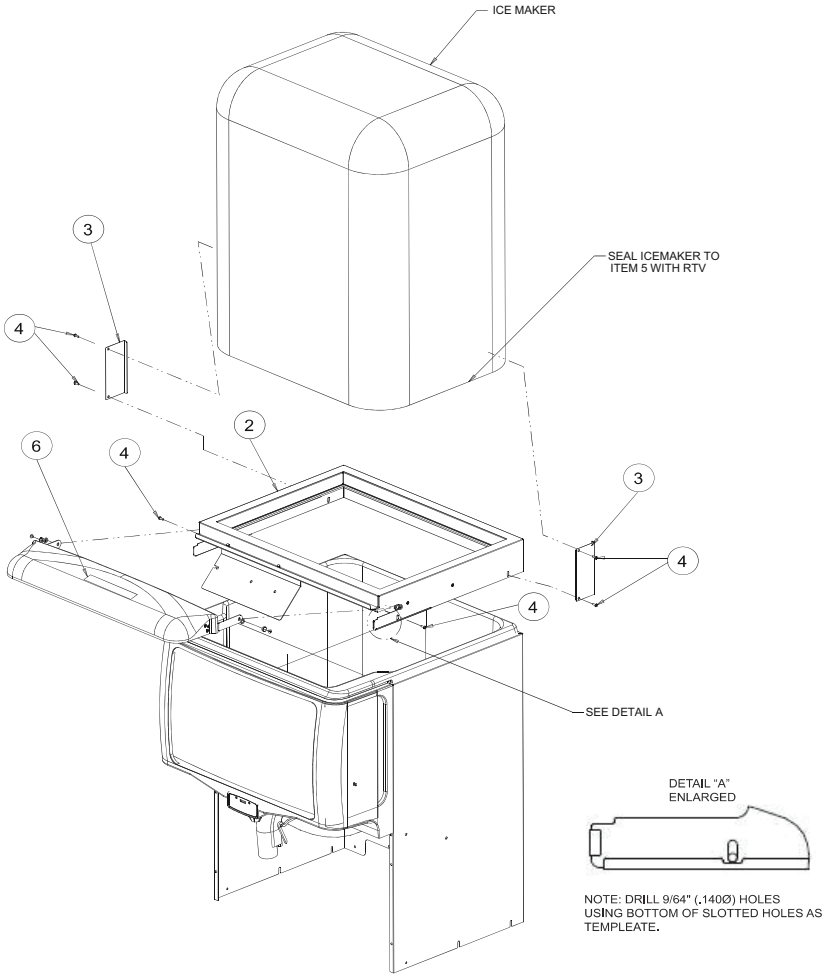

Figure 3. ED Dispenser Exploded Assembly with Ice maker

 © 2014, Cornelius Inc.

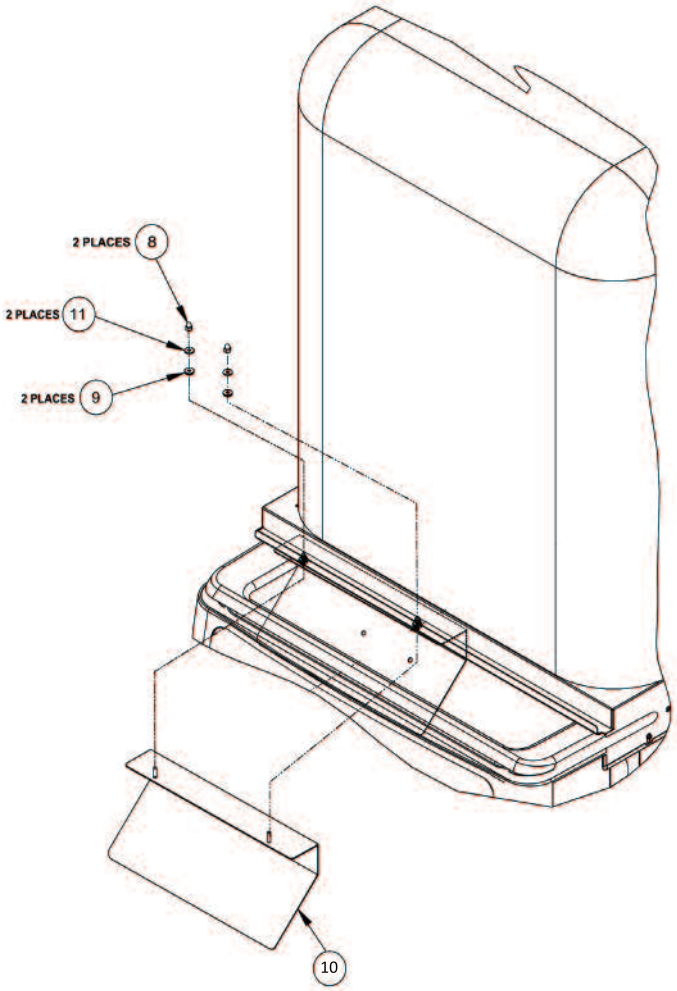

Figure 4

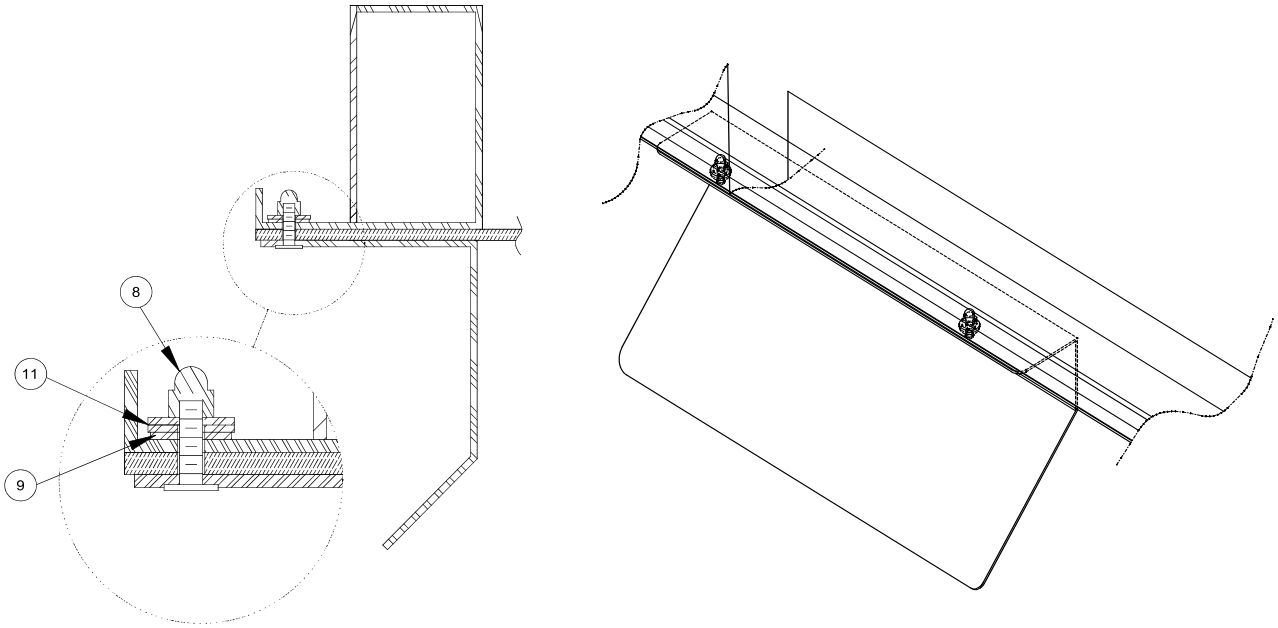

Figure 5. Ice Baffle Assembly

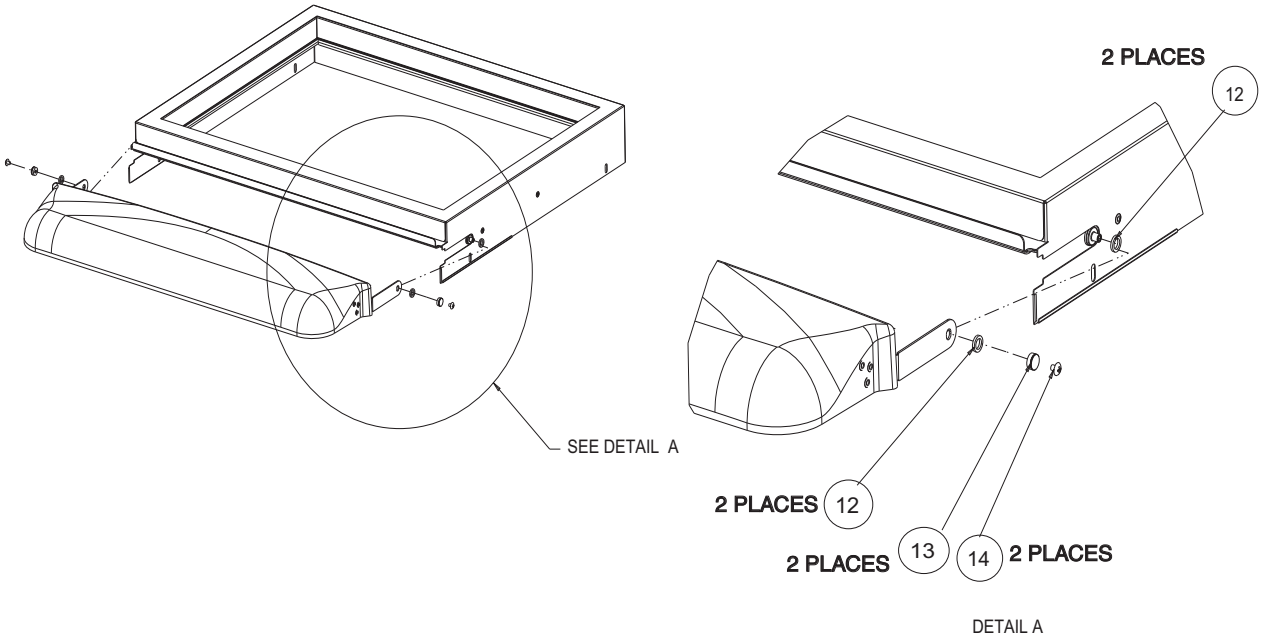

Figure 6

Adaptor Kit Operating Instructions

The plastic lid of the kit slides in and out and also hinges upward. This provides access to the hopper in the event manual ice filling is required.

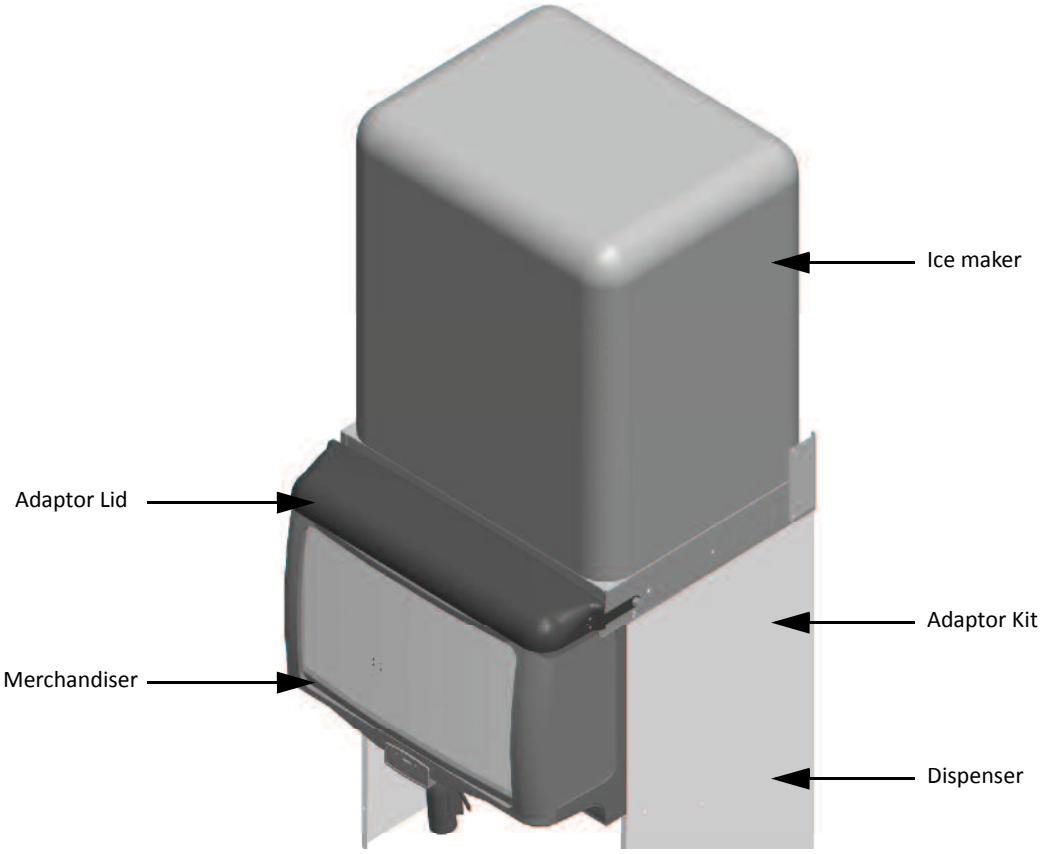

Figure 7. ED Dispenser Assembly with Ice maker

 © 2014, Cornelius Inc.

OPERATION

Opening Sequence

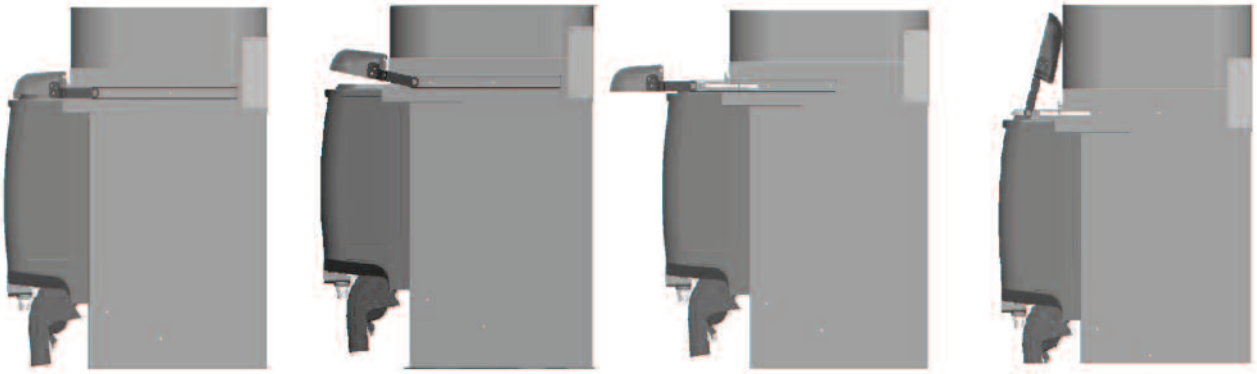

1. CLOSED POSITION 2. LIFT LID ASSY. BY ~10° 3. SLIDE OUT POSITION 4. OPEN POSITION

Figure 8

Closing Sequence

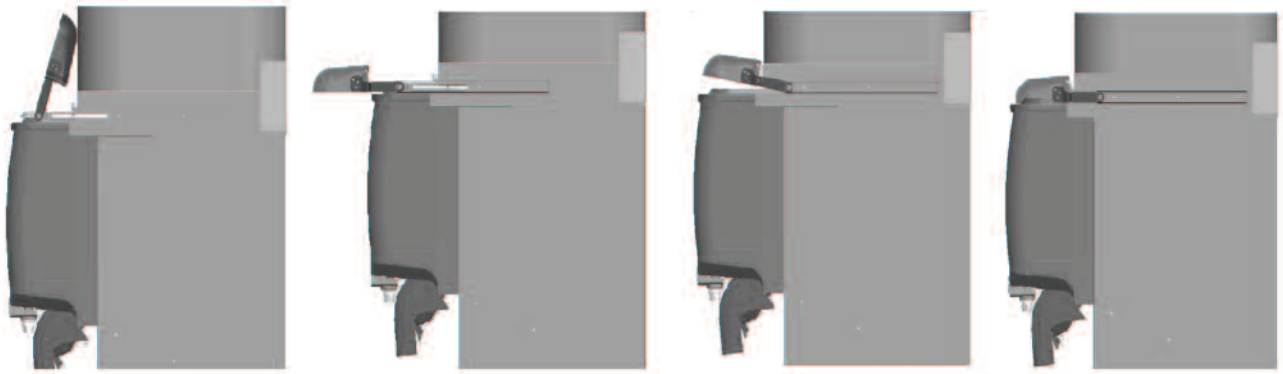

1. OPEN POSITON 2. SLIDE OUT POSITION 3. LIFT LID ASSY. BY ~10° 4. CLOSED POSITION

Figure 9

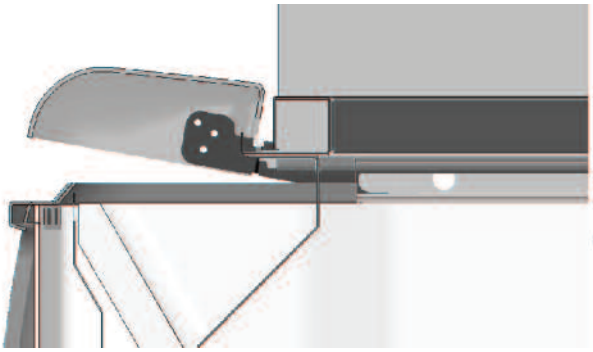

VERTICAL CROSS SECTION OF LID ASSEMBLY LIFTED BY ~10°
(STEP - 2 IN OPEN SEQUENCE)

Figure 10

If manual filling is required, the lid must be pulled out and lifted up as per the sequence. Do not leave the lid down and rest a bucket of ice on it while manual filling as this may cause damage to the lid.

 © 2014, Cornelius Inc.

Cornelius Inc.

www.cornelius.com