THE HOTTEST MACHINES ON ICE™

"I" Series
227
Ice Cube Machine
INSTALLATION INSTRUCTIONS

Part No. 630460042INS
Release Date: October 27, 2003
Revision Date: May 06, 2014
Revision: C

THIS DOCUMENT CONTAINS IMPORTANT INFORMATION
This Manual must be read and understood before installing or operating this equipment

© CORNELIUS INC; 2003–2014

PRINTED IN U.S.A

TABLE OF CONTENTS

GENERAL **1**

FREIGHT DAMAGE CLAIMS PROCEDURE 1

SPECIFICATIONS, ICE CUBER 1

INSTALLATION INSTRUCTIONS **2**

LOCATION OF EQUIPMENT 2

PLUMBING CONNECTIONS 2

ELECTRICAL 4

INSTALLATION CHECK POINTS 4

START-UP AND CHECK OUT 5

OWNER - OPERATOR 6

CLEANING PROCEDURES 6

PREP – CLEANING 6

CLEANING THE WATER SYSTEM & EVAPORATOR 6

SANITIZING PROCEDURES 7

DUMP CYCLE 8

ADJUSTING BRIDGE THICKNESS 10

TOTAL ICE CAPACITY 10

GENERAL

FREIGHT DAMAGE CLAIMS PROCEDURE

The deliverer of your equipment (freight company, distributor or dealer) is responsible for loss or damage of your shipment. All claims must be filed with the deliverer of your equipment. Please follow the steps below to determine if your shipment is satisfactory or if a claim must be filed:

1. Check the number of products delivered against the number of products listed on the delivery receipt. Should the totals not match, have the driver note all errors on both copies and both you and the driver sign and date said notation.
2. Inspect all cartons for visible damage. Open and inspect as required before the driver leaves and have him or her note any damage on the receipts. All damaged claims must be inspected within 15 days of delivery. Notify your carrier immediately if concealed damage is found after delivery.
3. Should concealed damage be found when product is unpacked, retain the packing material and the product and request an inspection from the deliverer.
4. All claims for loss or damage should be filed at once. Delays in filing will reduce the chance of achieving a satisfactory resolution to the claim.

SPECIFICATIONS, ICE CUBER

The following table contains equipment specification information for the Ice Cubers.

Model	**IACS227**	**IWCS227**	**IACS227E60**	**IWCS227E60**	**IACS227E50**	**IWCS227E50**
UNIT						
Volts	115		230		220	
Phase	1					
Hertz	60				50	
No. Wires	2+Ground					
MIN. CIRCUIT Amps	20		15			
MAX. FUSE SIZE Amps	20		15			
REFRIGERANT						
Type	R404A					
Weight (oz)	17	15	17	15	17	15
Weight (g)	482	425	482	425	482	425
COMPRESSOR						
Volts	115		230		220	
Phase	1					
Hertz	60				50	
LRA	51		24		26	
RLA	11.5		5.7		5.3	
CONDENSER FAN MOTOR						
Volts	115		230		220	
Phase	1					
Hertz	60				50	
Amps	1.7	NA	1.2	NA	0.75	NA
Watts	50	NA	60	NA	50	NA
WATER PUMP						
Volts	115		230		220	
Phase	1					
Hertz	60				50	
Amps	0.88		0.5			
Watts	1/40		1/30			

Important: All product supply voltage specifications are –5%/+10% for proper component operation.

INSTALLATION INSTRUCTIONS

Installation and start-up of the equipment should be performed by the distributor or the dealer's professional staff.

LOCATION OF EQUIPMENT

For maximum performance the location should be away from heat sources such as ovens, direct sunlight, hot air discharge, etc.

To reduce cost of maintenance and loss of efficiency, avoid placing air-cooled equipment in areas where grease, flour and other airborne contaminants are present. Allow clearance at the front for proper air circulation. Restricted air circulation will affect the efficiency and required maintenance of the product.

IMPORTANT: Never operate your equipment in room temperature below 50°F (10°C) or above 100°F (38°C). Should the location of your product ever be exposed to freezing temperatures, it must be shut down and winterized.

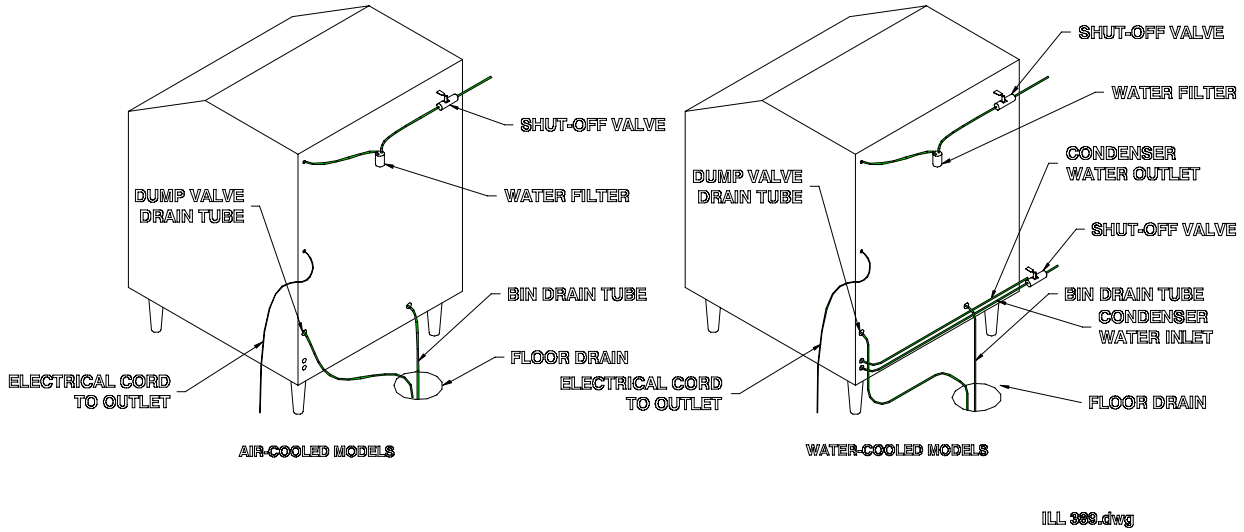

FIGURE 1. INSTALLATION

PLUMBING CONNECTIONS

1. All plumbing lines and connections must conform to local and national plumbing codes.
2. Line shut-off valves must be located in supply water lines for cuber and condenser if product is water-cooled. Water supply to water-cooled condenser must include a stand-pipe to prevent "water hammer".
3. Should your local water supply quality require the installation of a water filter system, consult your local distributor or dealer for proper size required.
4. Water supply pressure must not be lower than 20 PSI (1.37 BAR), nor should it exceed 120 PSI (8.16 BAR).

Important: Water filters larger then 5 microns do not give proper protection. Water pressures above 80 PSI (5.44 BAR) will destroy the filter.

Important: Bin and cuber drain lines must never be connected together and must be vented.

IACS/IWCS 227

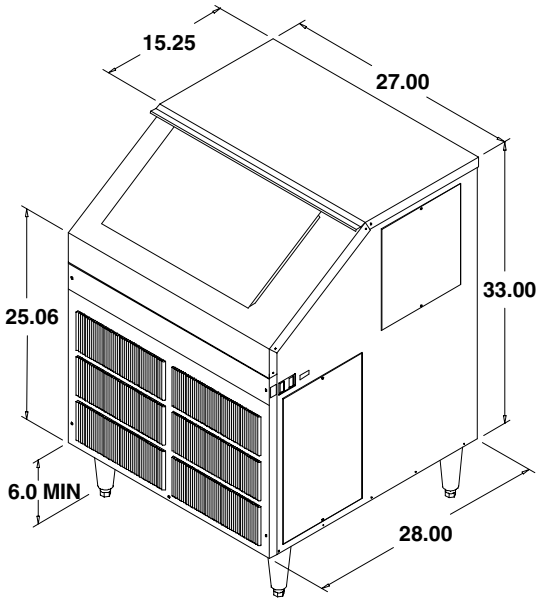

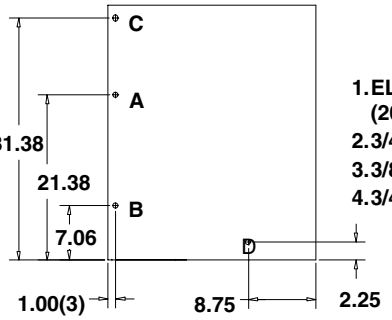

1. ELECTRICAL CORD ATTACHED (20 AMP CIRCUIT)
2. 3/4 DRAIN – TUBING SIZE 5/8 I.D.
3. 3/8 WATER INLET (SEA MALE FLARE)
4. 3/4 BIN DRAIN – STD PIPE SAE

IACS 227 REAR VIEW

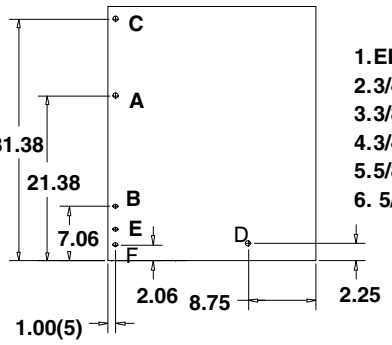

1. ELECTRICAL CORD ATTACHED (20 AMP CIRCUIT)
2. 3/4 DRAIN – TUBING SIZE 5/8 I.D.
3. 3/8 RESERVOIR WATER INLET (SAE MALE FLARE)
4. 3/4 BIN DRAIN – STD PIPE SAE
5. 5/8 CONDENSER WATER OUTLET (MALE FLARE)
6. 5/8 CONDENSER WATER INLET (MALE FLARE)

IWCS 227 REAR VIEW

INSTRUCTIONS FOR ATTACHING SUPPORT LEGS

1. LAY CABINET ON BACK OR SIDE USING BLANKET OR SIMILAR SOFT PADDING TO AVOID MARRING.
2. REMOVE CRATE SKID FROM UNIT BOTTOM.
3. SCREW ADJUSTABLE LEGS INTO RECESSED THREADS OF UNIT BASE.
4. LEVEL UNIT USING FEET FOR ADJUSTMENT.

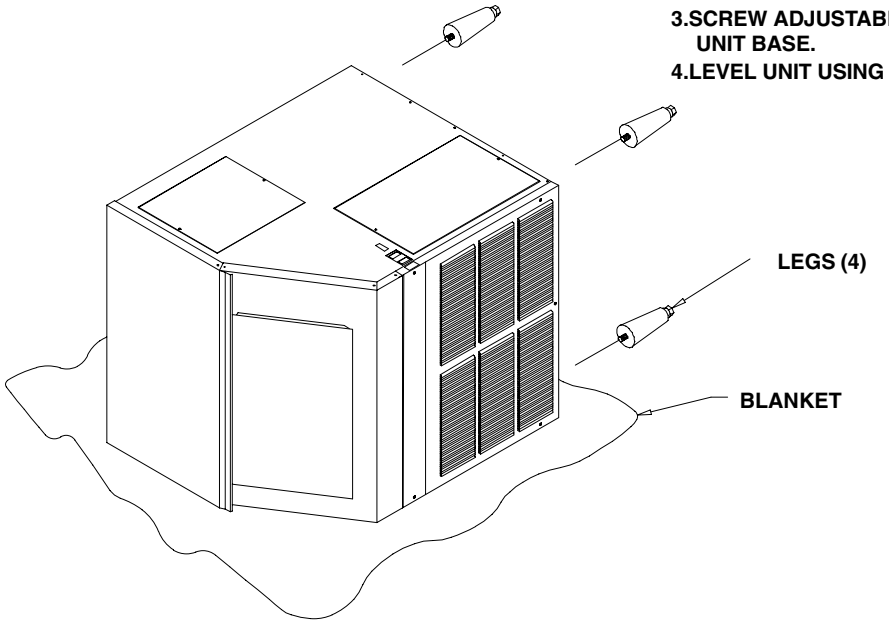

FIGURE 2. CUBER INSTALLATION

ELECTRICAL

1. All wiring and connections must conform to national and local electrical codes.
2. Wire size and circuit protection must conform to specifications and cuber must be on a separate electrical circuit.
3. Strain relief connectors must be used at the of the control box and the cuber.
4. Cuber must be grounded by the control box ground screw or other method for intentional safety grounding that meets code requirements.
5. A manual disconnect in a convenient location to the cuber must be installed.

INSTALLATION CHECK POINTS

1. Has bin and cuber been leveled and sanitized?
2. Does electrical and plumbing meet code requirements?
3. Check correct operating water level in the water pan.

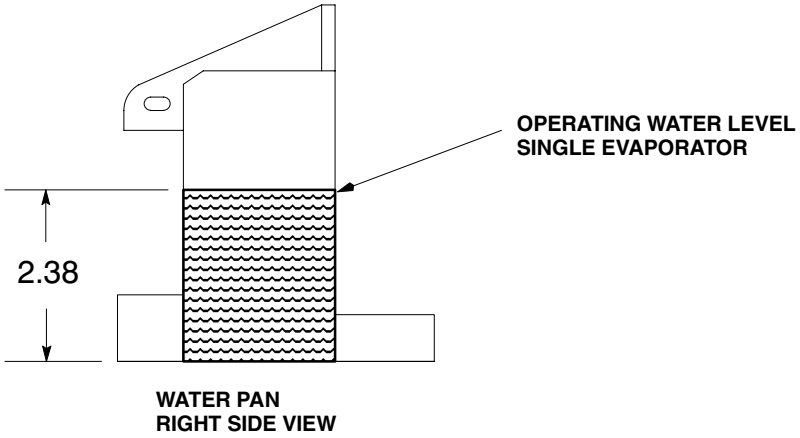

FIGURE 3. SINGLE EVAPORATOR WATER LEVEL

4. If water-cooled, are inlet and drain connections to condenser correct to prevent “water hammer”?
5. Are drain lines separate and vented?
6. Is there clearance at the front of the machine for proper air circulation?
7. Does the water curtain move freely, and does the float valve shut off incoming water to the water pan?
8. Vigorously rub the stainless steel water plate(s), on top of the evaporator(s), with Scotch-Brite pad to remove any oxidation and improve the ability of the water to properly track across the plate.

START-UP AND CHECK OUT

1. Turn the cuber's power switch to the clean (pump only) position. The water pump only should be operational. Check for an even, steady flow of water over the evaporator top extrusion and down over evaporator surface. Check that all ports of the water distribution tube are open for even water discharge. The water pan should refill and the float should stop the incoming water supply.

2. Place the cuber's power switch in the on position. After a 2 second delay the compressor will start. The condenser fan will operate when the condenser sensor signals the circuit board that its temperature is 100°F (38°C) The water pump will operate when the evaporator cools to 25°F (–3.9°C). Depress the manual harvest switch located on the circuit board. The fan motor will stop and the water dump valve will open. In 3 seconds the hot gas solenoid will open and 15 seconds after depressing the manual harvest switch, the water pump will stop and the dump valve will close terminating the dump cycle.

3. Hold the water curtain open for a maximum of 30 seconds; the product should shut down. Release the water curtain(s). When the curtain(s) closes, there will be a 2 second delay, then the compressor will start and the start–up process should begin for the next ice making mode.

4. If all product operation are as stated, allow product to operate and produce one slab of ice, then discard the ice. Allow the product to continue operation to fill the storage bin.

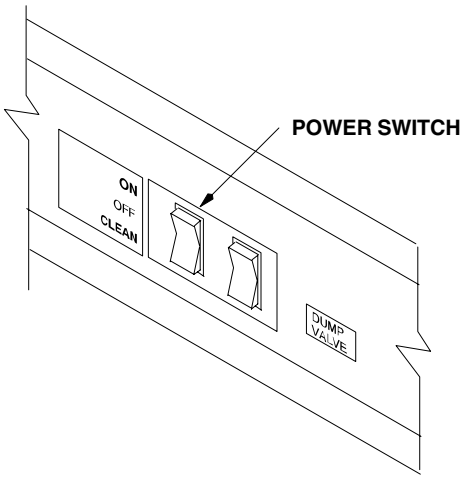

FIGURE 4. SWITCH PANEL

OWNER - OPERATOR

The installation is not complete until you are sure the owner-operator understands the cuber operation and his or her responsibility of preventative maintenance.

Does the owner-operator know:

1. Location of electrical disconnect switch and water shut-off valves?
2. How to start and/or shut down the product, clean and sanitize it?
3. Bin full operation and reset operation of high pressure cutout (water-cooled and remote products only)?
4. How to clean the condenser and fan blade?
5. Whom to call for product information and/or service?

CLEANING PROCEDURES

Approved ice machine cleaners by brand names:

- Lime–A–Way
- Calgon Nickel Safe (green color only)

NOTE: All ice machine cleaners labeled safe for nickel ARE NOT the brand CALGON NICKEL SAFE.

CAUTION: Ice machine cleaners are acidic-based chemicals. Before beginning any cleaning of the cuber, the ice in the storage bin or dispenser must be removed.

WARNING: When using any chemical, rubber gloves and eye protection should be worn.

PREP – CLEANING

Use full-strength ice machine cleaner on a coarse-surface cloth material (such as terry cloth) and wipe down the inside wall of the evaporator area, the water pan, the water curtain and evaporator plastic extrusions. If the water distributor tube has heavy scale build–up, remove and soak it in full-strength ice machine cleaner (or exchange the tube and clean the scaled tube at a later date).

CLEANING THE WATER SYSTEM & EVAPORATOR

1. Set the switch to CLEAN and allow the ice on the evaporator to release and melt away.
2. Remove all ice from the storage bin.
3. Remove the water curtains, pour 1/2 oz. of ice machine cleaner down the rear key-slot openings. The cleaner will drain into the water pan.
4. Return the water curtains to their proper operating position.
5. Add 3 oz. for a single evaporator, or 5 oz. for a dual evaporator of “Calgon Nickel-Safe” or “Lime-A-Away” ice machine cleaner directly into the water pan. Set switch to CLEAN, circulate for a maximum of 15 minutes
6. Depress and hold the dump switch to allow the cleaner to drain away.

7. Fill the water pan with clean fresh water, circulate for approximately 3 minutes. Depress the DUMP switch and allow the water to drain away. Repeat this procedure 3 times.

8. After third rinse cycle, place product power switch in ice position. Allow product to produce one slab of ice – DISCARD THE ICE.

9. When clean cycle is complete, return cuber to normal operating mode.

NOTE: Please Take Note of the Following:

- Ice machines should only be cleaned when needed, not by a timed schedule of every 60 days, etc.
- Should your ice machine require cleaning more than twice a year, consult your distributor or dealer about proper water treatment.

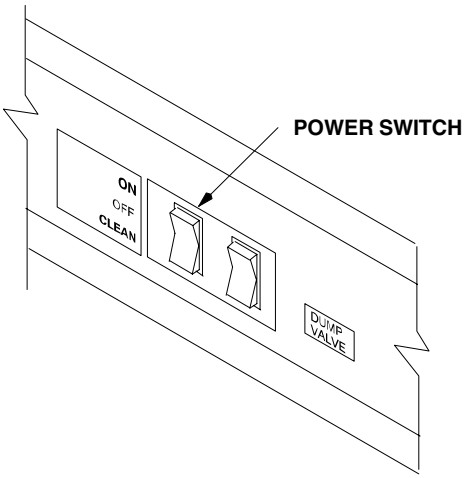

SANITIZING PROCEDURES

NOTE: To be performed only after cleaning the ice machine:

1. Add 1/4 ounce (7.08 g) sodium hypochlorite solution (common liquid laundry bleach) to the water pan and allow the pump to circulate the solution for 5 minutes. You may also use a commercial sanitizer such as Calgon Ice Machine Sanitizer following the directions on the product label.

2. Turn the product power switch off and depress the dump switch to drain the water pan.

3. To sanitize the bin and other surface areas, use 1 ounce of liquid bleach per gallon of water and wipe all areas with the solution. Or use a commercial sanitizer.

4. Place the product power switch in the ice position. Discard the first batch of ice produced.

5. Cleaning and sanitizing are now complete. Product may be returned to normal service.

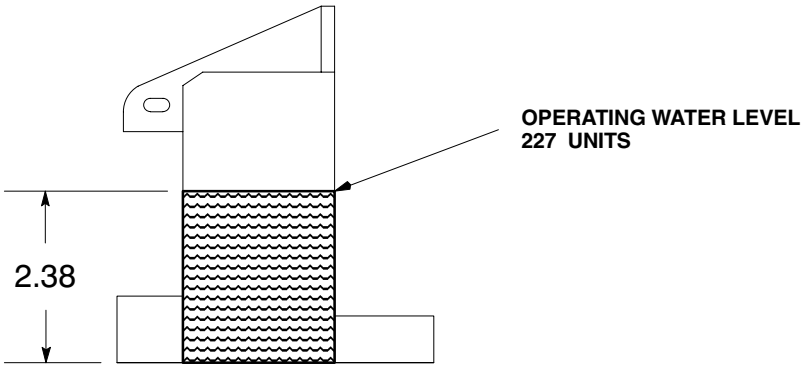

WATER PAN
RIGHT SIDE VIEW

DUMP CYCLE

1. With the proper water level in the water pan, start the water pump to circulate the water. Check that the float will return water level to original setting and stop the inlet water.

2. There is a flow washer in the inlet side of the float assembly that will control inlet water pressure from 50/120 PSI (3.4/8.16 Bars). This will prevent float flutter. In low water pressure conditions, 20 PSI (1.37 Bars) or less, the flow washer may have to be removed from the float assembly for proper fill volume.

FIGURE 5. FLOW CONTROL WASHER

3. Push the manual DUMP switch – allow dump action to drain the water pan. When you release the momentary switch, the pump will stop and the float will return the water level back to its original setting and shut off the water supply.

4. You have the option of selecting dump cycle intervals of:

   - every cycle;
   - every 3rd cycle;
   - every 5th cycle;
   - every 7th cycle.

Remember, the higher the mineral content in the water supply the more often it will be required to dump the water and/or clean the product if proper water treatment is not used.

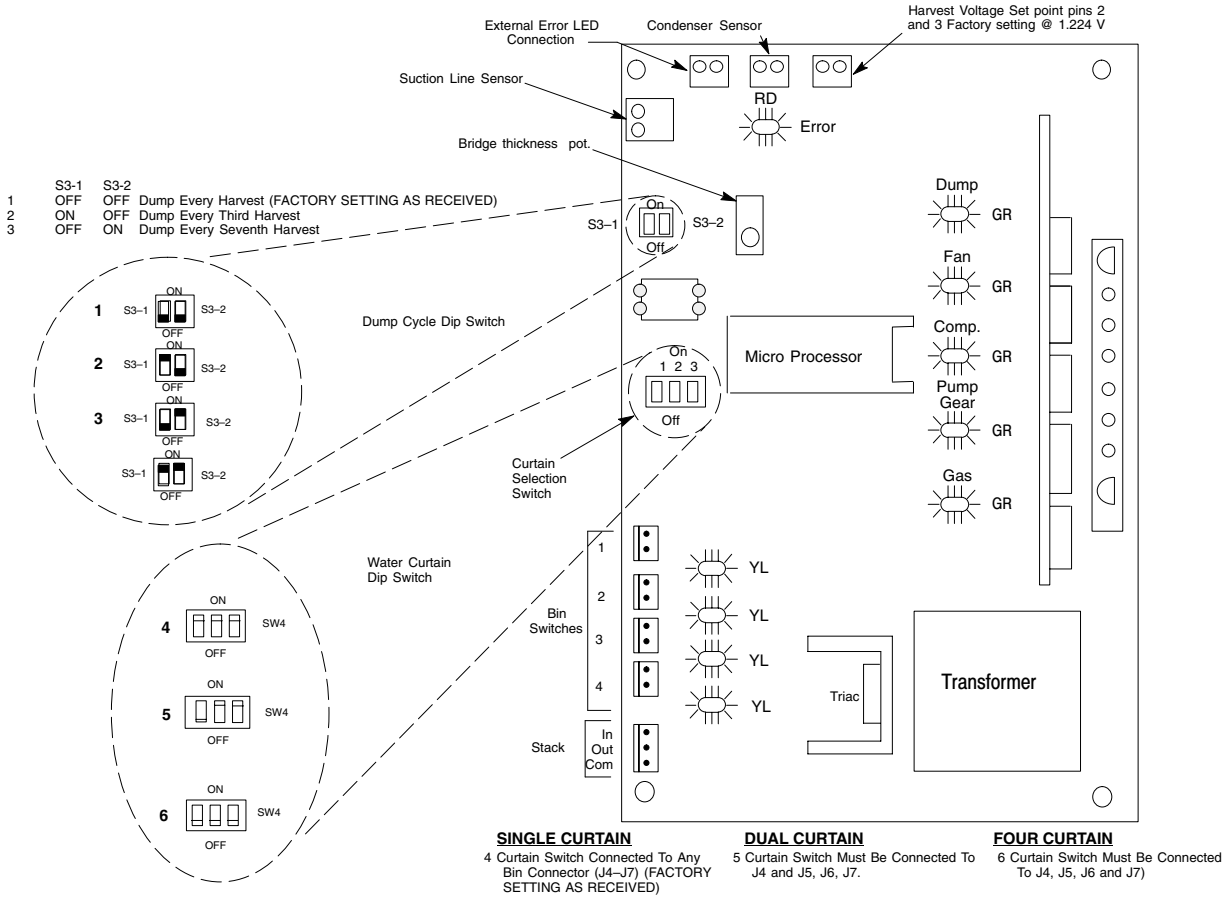

FIGURE 6. DUMP CYCLE OPTIONS

STATUS INDICATOR

D1-2 3-4	Yellow LED	Water Curtain(s)-Dip switch can be set for 1,2, or 4 curtain units
D9	Red LED	Error
D12	Green LED	Hot Gas Valve(s)
D13	Green LED	Condenser Fan
D14	Green LED	Water Pump
D15	Green LED	Compressor Contactor
D16	Green LED	Dump Valve

Water Curtain(s) Open

D1-2 3-4	Yellow LED	(on or off)	Curtain(s) Closed Curtain(s) Open

Pre-Chill Mode

D1-2 3-4	Yellow LED	(on)	Water Curtain(s) closed.
D13	Green LED	(on or off)	Condenser fan cycles on and off depending upon condenser temperature. *
D15	Green LED	(on)	Contactor closed, compressor active.

Ice Making Mode

D1-2 3-4	Yellow LED	(on)	Water Curtain(s) closed.
D13	Green LED	(on or off)	Condenser fan cycles on and off depending upon condenser temperature. *
D14	Green LED	(on)	Water pump active at evaporator temperature of 20° F or lower, except during dump cycle.
D15	Green LED	(on)	Compressor contactor closed.

Harvest Mode

D1-2 3-4	Yellow LED	(on)	Water Curtain(s) closed.
D14	Green LED	(on) 15 sec.	Water pump active for 15 sec., then deactivate.
D15	Green LED	(on)	Compressor contactor closed - Compressor active.
D16	Green LED	(on) 15 sec.	Dump valve active (15 sec.)

Error LED

D9	Red LED		Turns on when the system is shut down.
D9	Red LED	(on) or flashing	Assists to indicate where the error may be and or what may have caused the error.
D9	Red LED	(on)	Evaporator temperature drops below, -25° F.
D9	Red LED	(on)	OPEN THERMISTOR CIRCUIT - Thermistor open / broken wire / poor connector
D9	Red LED	(on) 15 sec.	High evaporator temperature: evaporator does not fall below 40° F within 6 minutes into freeze cycle.
D9	Red LED	Flashing 1/2 sec. on/ 1/2 sec. off	High temperature shutdown- condenser temperature exceeds 150° F +2, -6° F.

* [Remote & water cooled use a resistor plug in J-3 connector] 1.8K ohm. Fan does not cycle.

ADJUSTING BRIDGE THICKNESS

For optimum ice production and maximum cube separation, the ice connecting the individual cubes should be a minimum of 1/8” (.32cm) thick at the center area of the ice waffle.

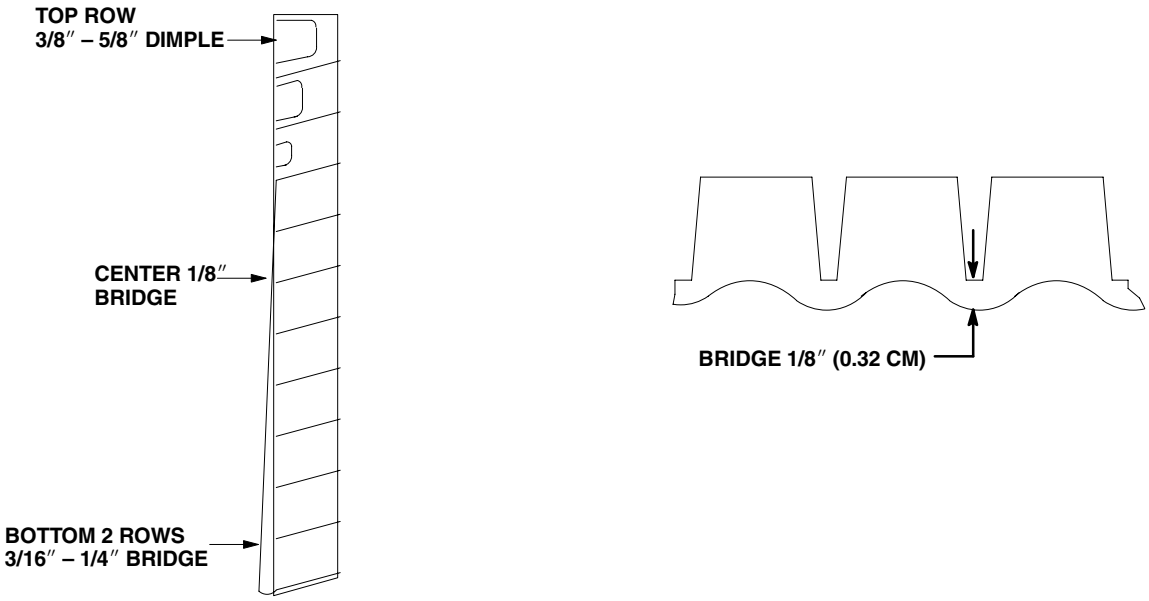

FIGURE 7. CUBE SEPARATION

It is normal for the ice bridge to be slightly thicker at the bottom and taper off in a slight wedge pattern at the top. The top row of cubes must have a complete pattern of ice on all four sides and the back wall. **REMEMBER**, when you operate the product with the panels off during testing the additional heat at the top of the evaporator will cause thinner ice at the top than when the panels are in place.

Should a different thickness of the bridge be desired, it will be required to adjust the ice thickness “POT”, located on the circuit board, as follows:

1. Thinner Bridge – turn the ice thickness “pot” adjustment screw CW one full turn. Allow two cycles before determining if additional adjustments are required.

2. Thicker Bridge – turn the ice thickness “pot” adjusting screw CCW one full turn. Allow two cycles before determining if additional adjustments are required.

NOTE: Never judge the thickness of the ice from the first batch of the ice produced – the first cycle is a balance cycle. Always wait for the second cycle before making any adjustments.

Using the proper ice deflector will insure a better seperation and allow for a more complete bin fill pattern.

TOTAL ICE CAPACITY

Ice capacity of any ice maker is affected by many operating conditions, such as water and air temperature and location factors. Please review the capacity tables in this manual for average 24–hour capacity under various conditions.

NOTE: All printed capacity ratings are ± 10% except 50 HZ units these products have 12% increase in cycle time and capacity decrease of approximately 17%.

CORNELIUS INC.

www.cornelius.com