Remcor Incorporated
500 Regency Drive
Glendale Heights, IL 60139
Telephone (708) 980-6900
Facsimile (708) 980-8511

INSTALLATION INSTRUCTION

FOR

INSTALLING KOLD DRAFT GT SERIES CUBERS ON REMCOR MODEL TJ250 DISPENSERS

1. Drill 1 in. diameter hole in dispenser ice storage bin for icemaker drain tubing as shown in Figure 1.
2. Seal icemaker to top of dispenser as follows: (Figure 2)
   A. Run a bead of RTV on the dispenser cover around the outline of the icemaker frame.
   B. Set icemaker onto cover and position as shown.
   C. Wipe away excess RTV.
3. Install the rear angle bracket as follows: (Figure 3)
   A. Run a bead or RTV around the bottom surface of the exposed icemaker frame.
   B. Install the rear bracket as shown using hardware provided.
4. Fasten the front icemaker frame to the dispenser cover as shown in Figure 3 using hardware provided.
5. Route the bin thermostat bulb according to the icemaker manufacturer ŝ instructions.
6. Follow the manufacturer instructions to complete the installation of the icemaker.

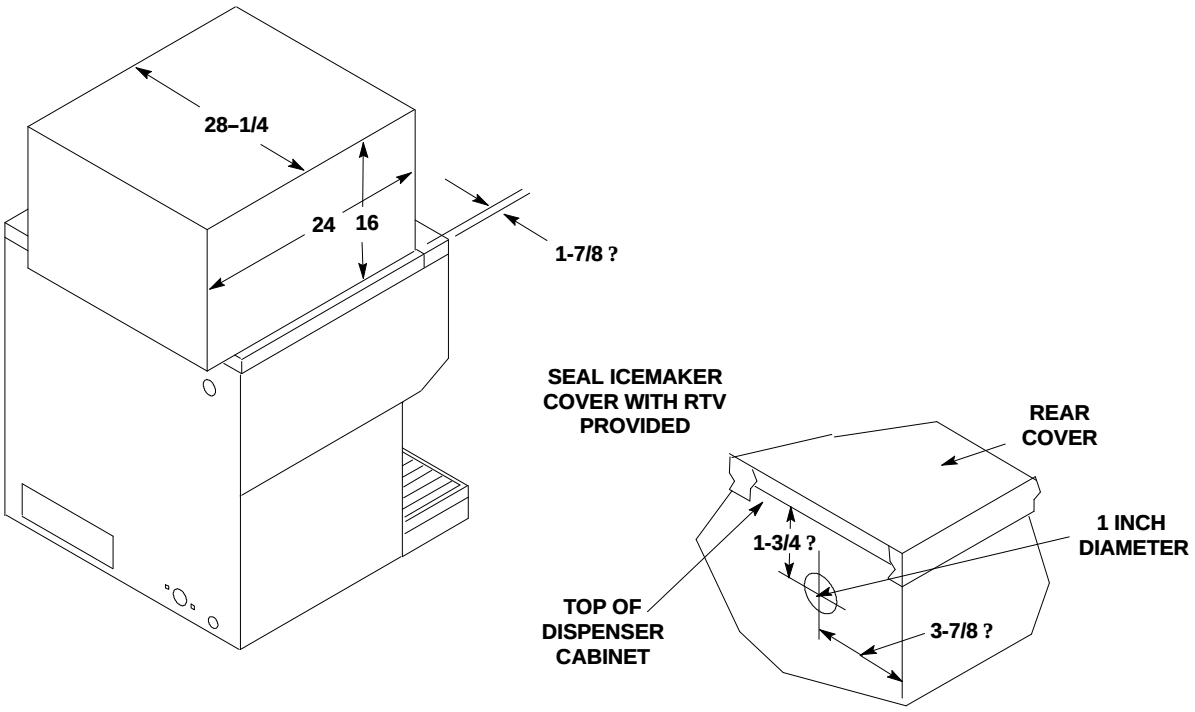

FIGURE 1.

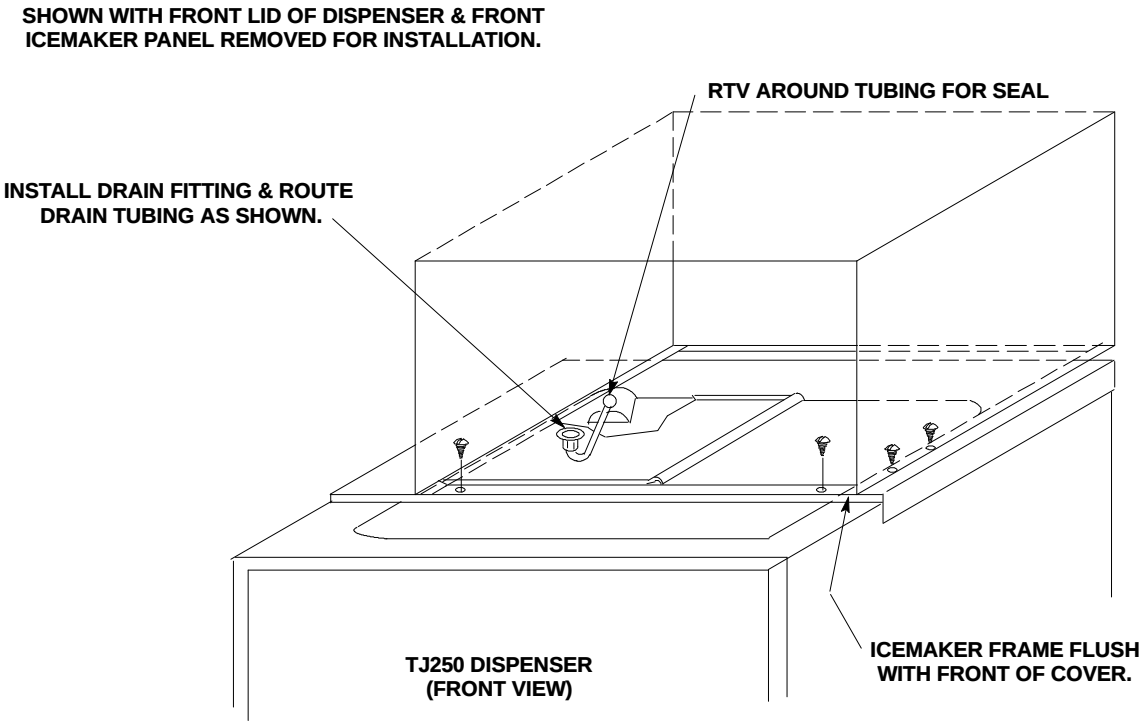

FIGURE 2. INSTALLATION DETAILS KOLD-DRAFT GT7/GT8 ICEMAKERS

.

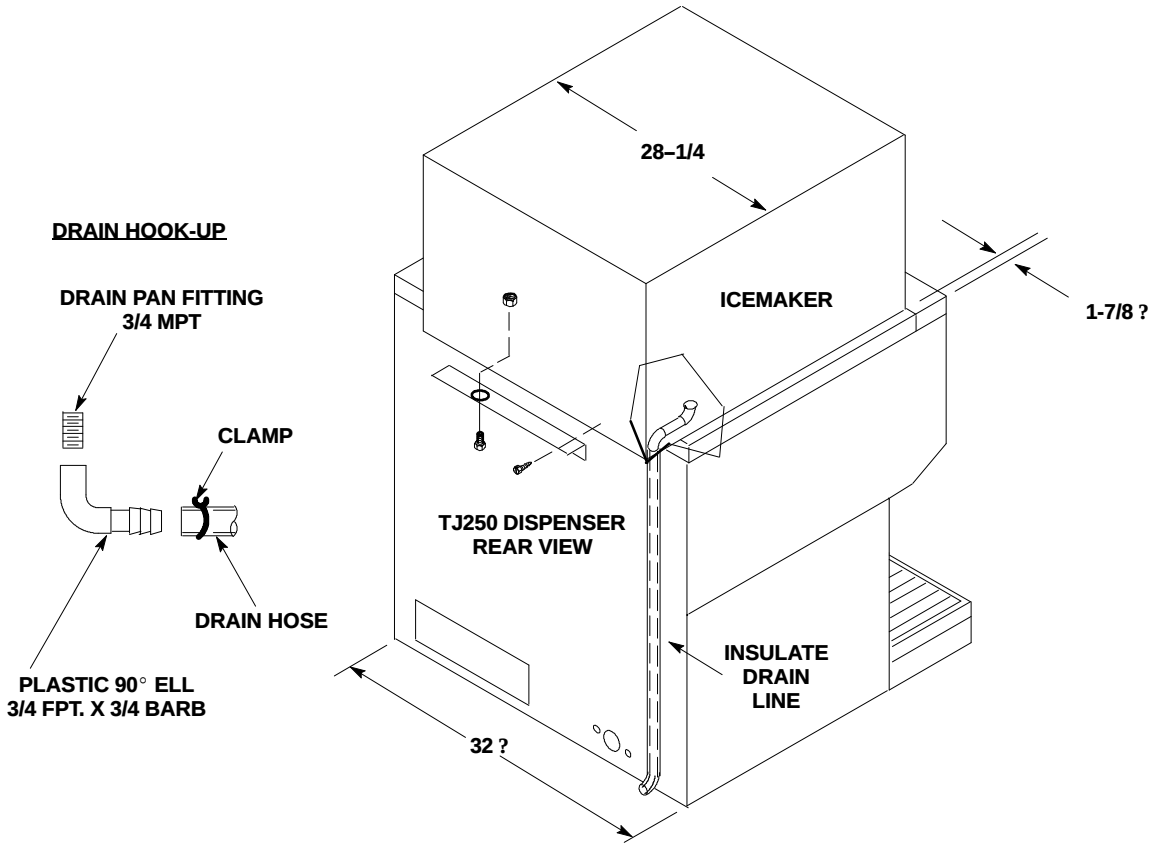

FIGURE 3.