REMCOR®

ICE/BEVERAGE DISPENSERS

OWNER'S MANUAL

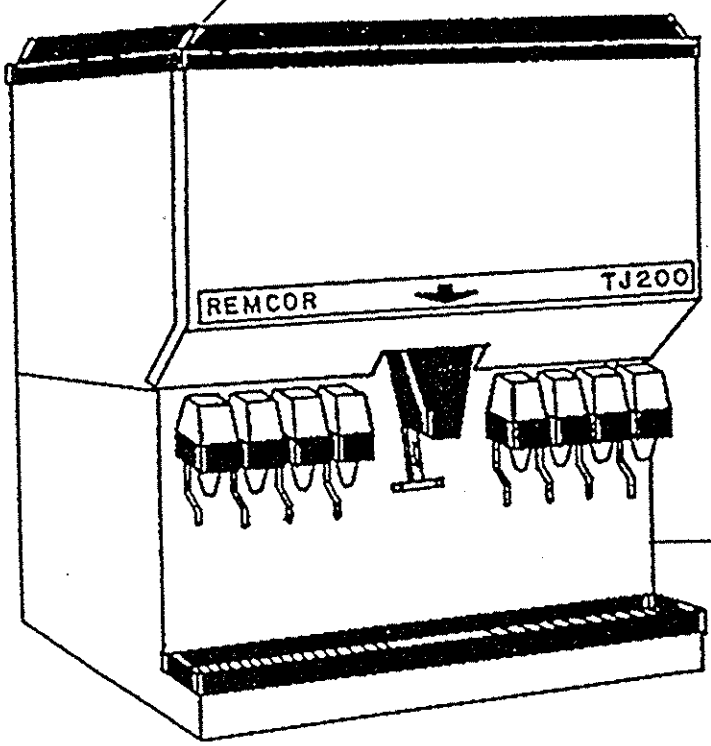

MODELS:
TJ200/250/300B
TJ200/250/300BC
TJ200/250AB
TJ200/250ABC
TJ200/250/300KB
TJ200/250/300KBC

REMCOR PRODUCTS CO.
500 REGENCY DRIVE
GLENDALE HEIGHTS, IL 60139-2268

P/N 90820 REV. D

CONTENTS

	Page
Safety Precautions	1
Description	2
Specifications	3
Ice Maker	4
Installation Instructions	5
Operating Instructions	6 -7
Cleaning Instructions	8-10
Gate Restrictor Plate	11
Maintenance	12
Troubleshooting Guide	13-14
Wiring Diagram for "B" Models	15
Wiring Diagram for "A," "K," "BC" Models	16
Beverage System Wiring	17
Beverage System Schematic for "B" Models	18
Beverage System Schematic for "BC" Models (with Cold Plate)	19
Mounting Template	20-20A
Exploded View - Upper Section	21
Exploded View - Lower Section	22
Solenoid Assembly	23
Parts List	24-25
Warranty	26

MANUFACTURED UNDER PATENT NUMBERS 3,393,839/3,517,860
CANADIAN PATENT NUMBERS 912,514/4,346,824 (10/72)
OTHER PATENTS PENDING

SAFETY PRECAUTIONS

Always disconnect power to the dispenser before servicing or cleaning.

Never place hands inside of hopper or gate area without disconnecting power to the dispenser. Agitator rotation occurs automatically when dispenser is energized!

This ice dispenser has been specifically designed to provide protection against personal injury and eliminates contamination of ice. To insure continued protection and sanitation, observe the following:

> ALWAYS be sure the removable lid is properly installed to prevent unauthorized access to the hopper interior and possible contamination of the ice.
>
> ALWAYS be sure the upper and lower front panels are securely fastened.
>
> ALWAYS keep area around the dispenser clean of ice cubes.

C A U T I O N

1. Dispenser cannot be used with crushed or flaked ice.
2. Use of bagged ice which has frozen into large chunks can void warranty. The dispenser agitator is not designed to be an ice crusher. Use of large chunks of ice which "jam up" inside the hopper will cause failure of the agitator motor and damage to the hopper. If bagged ice is used, it must be carefully and completely broken into small, cube-sized pieces before filling into the dispenser hopper.

DESCRIPTION

The REMCOR® TJ200 and TJ300 series of ice dispensers solve your ice service needs the sanitary, space saving, economical way. The units are designed to be either manually filled with ice from any remote ice making source or to be used with one of several "piped ice" type ice makers or top-mounted "ice cuber."

These dispensers will dispense cubes (up to 1-3/8" size), cubelets and hard-chipped or cracked ice. REMCOR® dispensers cannot be used with crushed or flaked ice.

"B" models contain beverage faucets only and must be supplied with cold product from any remote cold plate or refrigerated soda factory.

"BC" models contain beverage faucets and an internal cold plate system. They are designed to be supplied direct from syrup tanks and carbonator, with no additional cooling required.

SPECIFICATIONS

Model Designation: TJ __1__ __2__ - __3__ __4__

1. Ice Storage Capacity: TJ200=200 lbs. TJ250=250 lbs. TJ300=300 lbs.

2. Cabinetry Options: (E) Neutral beige, baked enamel finish and wood grain vinyl-clad upper front panel.
   (S) All stainless steel.

3. Ice-Fill Options: (No Letter) Manually filled from remote ice maker.
   (A) Automatic fill from a "piped ice" type ice maker.
   (K) Automatic fill from a top-mounted "ice cuber."

4. Beverage Systems Options: (B) Beverage faucets.
   (BC) Beverage faucets and an internal cold plate system.

Example: Model TJ250S-KBC has a 250 pound ice storage capacity with stainless steel cabinet, beverage faucets, internal cold plate and is designed for automatic filling from a top-mounted ice maker.

	TJ200	TJ250	TJ300
Ice Storage Capacity (lbs.)	200	250	300
Electrical	115 Volts, 1 Phase, 60 Hertz, 6.0 AMPS		
Electrical Connection	"B," "BC," "KBC," "KB" Models: Supplied with 6 Ft./3-Wire cord with 3-Prong ground type plug. "A" Models: Supplied with 2 X 4 junction box located in lower cabinet enclosure for permanent wiring installation.		
Faucets	Maximum number of 8 faucets available 10		
Drain Connection	7/8" ID Hose		
Dimensions (Inches) Wide X High X Deep	32X38-1/2X36	32X42-1/4X36	36X44-1/4X36
Shipping Weight (lbs.)			
"B," "KB," "AB"	220	245	260
"BC," "KBC," "ABC"	275	300	310
Operating Weight (lbs.) (Less Ice Maker)			
"B," "KB," "AB"	420	495	560
"BC," "KBC," "ABC	475	550	610

ICE MAKER

REMCOR® "A" and "K" model ice/beverage dispensers are designed to be used with one of several "piped ice" type ice makers or top-mount "ice cubers." This must be obtained from the appropriate manufacturer.

FEED TUBE OR ICE MAKER INSTALLATION KIT

This kit contains parts and instructions necessary to connect the ice maker to the ice dispenser. Be sure the kit you receive is proper for your ice maker. The following kits are approved for use on the TJ200/250/300 "A," "K" dispensers:

"A" MODEL DISPENSERS

Kit Number	Ice Maker	Model
1913	Reynolds	CF-3-TT
1922	Reynolds	CF-6-TT
1923	Jeito	MD700
1924	Scotsman	EC900

"B" MODEL DISPENSERS

Kit Number	Ice Maker	Model
1930 (TJ300)	Ice-O-Matic	C20/40/60
2097 (TJ250)	Ice-O-Matic	C20/40/60
1931	Manitowoc	200/400/600
1932	Kold Draft	GT300/400/500/600
2011	Scotsman	CM250/450/500/650
2012	Hoshizaki	KM451/452/630/632

INSTALLATION INSTRUCTIONS

1. The ice dispenser must be sealed to the counter. The template drawings (Pages 20-20A) indicate openings which must be cut in the counter. Locate the desired position for the dispenser, then mark the outline dimensions and cut out locations using the template drawings. Cut openings in counter.

   Apply a continuous bead of National Sanitation Foundation (NSF) approved silastic sealant (Dow 732 or equal) approximately 1/4" inside of the unit outline dimensions and around all openings. Then, position the u nit on the counter within the outline dimensions. All excess sealant must be wiped away immediately. "A" models must be fastened in place with mounting hardware provided.

2. Carefully pull the beverage tubes, drain line and power cord through the large openings in the bottom of the unit. See Pages 20-20A, MOUNTING TEMPLATES, for locating the required clearance holes in the counter for these utility lines.

3. "A" and "K" models only: Install ice maker according to instructions supplied with kit and manufacturer's instructions supplied with ice maker.

4. Connect the drain tube to an open drain. If additional piping is required, it must be 3/4" IPS (or equal) and must pitch downward away from the unit for proper drainage.

5. Connect the beverage system product lines as indicated on Page 18 ("B" Models) and Page 19 ("BC" Models). This work should be done by a qualified serviceman. **Note that the hoses are marked with numbers (1 through 8) for syrup connections and "CW" for carbonated water connection.**

6. Clean the ice dispenser interior (see CLEANING INSTRUCTIONS).

5. Connect the power cord to a 115 volt, 60 cycle, 3-wire grounded receptacle. "A" models must be permanently wired and conform to NEC and local codes.

OPERATING INSTRUCTIONS

1. Ice Dispensing: Depressing the operating lever activates a microswitch behind the front panel which energizes the agitator motor and gate solenoid. This causes the agitator to rotate and the gate slide to lift, allowing ice to push out the gate opening.

2. Ice Level (Standard Models): When ice level light is on, remove the lid and fill the hopper with ice. Replace lid to avoid contamination of ice. **Note: Use caution to avoid spilling ice when filling dispenser. Clean up immediately any spilled ice from filling or operating the unit. To prevent contamination of ice, the lid must be installed on the unit at all times.**

   Automatic Ice Filling ("A" Models): While the ice maker is running, the ice entering the hopper from the feed tube should be loose and in small pieces. Ice entering in the form of hard-packed cylinders indicates a restriction or distortion of the feed tube and could result in ice maker malfunction, if not corrected. The automatic agitation timer causes the ice to level which allows the entire storage bin to fill before the ice machine shuts off. When the ice level remains at the deflector after agitation, the ice maker control capillary (ice maker bulb) stops ice maker operation until the level drops and the bulbs warm up.

   Immediately after ice maker shut-off, observe the ice in the hopper between the feed tube entrance and the deflector. It should be loosely pressed against the top of the deflector, indicating correct thermostat operation. If the ice level is low or if the ice is packed hard against the deflector, it will be necessary to re-adjust the ice maker bin control, according to the ice maker instructions. (Adjust the control warmer to lower the ice level and colder to raise the ice level.

   Automatic Ice Filling ("K" Models): As with "A" models, the agitation timer causes the ice to level which allows the entire storage bin to fill before the ice machine shuts off. The ice maker control capillary bulb maintains the ice level in the storage hopper. Consult the instructions provided with the installation kit (Page 5) and the ice maker manual for location and operation of the ice maker control.

3. Beverage System - Beverages may be dispensed by operating the lever on the appropriate faucets. On units with cold plates ("C" models), periodic movement of the ice in the hopper is necessary to maintain the level of ice on the cold plate. On initial start-up or after long idle periods with no use, dispensing ice for 20-30 seconds is necessary to fill the cold plate or warm beverages may be experienced.

CLEANING INSTRUCTIONS

W A R N I N G

DISCONNECT POWER BEFORE CLEANING! Do not use metal scrapers, sharp objects or abrasives on the surface of the liner, as damage may result. Do not use solvents or other cleaning agents, as they may attack the plastic liner.

DISPENSER

1. Clean the ice dispenser interior at least once a month.
2. Remove the agitator bolt and lift off the agitator assembly, taking care not to lose the shaft key. Wash and rinse all parts thoroughly.
3. Carefully remove, wash and rinse all internal hopper components.
4. Wash down the inside of hopper and top cover with mild detergent solution and rinse thoroughly to remove all traces of detergent.
5. Replace agitator and other components.
6. Sanitize the inside of hopper and agitator with a solution of 1 ounce of household bleach in 1 gallon of water.
7. With the brush provided, clean the inside of the ice chute with a mild detergent solution and rinse thoroughly to remove all traces of detergent. Sanitize as described in Step 6.

COLD PLATE

1. Carefully remove the lower front panel of the ice dispenser.
2. Remove cold plate cover by lifting slightly in front and slide forward.
3. Wash down the inside of the cold plate and cover with mild detergent solution and rinse. A small, long-handled brush will be found helpful in reaching the corners.

4. Replace the cover, taking care that it is securely positioned in cold plate tray.

5. Replace and lower front panel, carefully feeding the tube and wires into the cabinet. Be sure not to pinch any tubing or wires between the panel and cabinet.

BEVERAGE SYSTEM

1. Remove faucet spouts, wash in mild detergent, rinse and replace.

2. Disconnect electrical power to the carbonator. Shut off the water supply and close the CO_2 regulator to the carbonator.

3. Disconnect the syrup tanks from the system.

4. Energize the beverage faucets to purge the remaining soda water in the system.

5. Use a clean 5 gallon tank for each of the following:

   A. Cleaning Tank - Fill with hot (120°-140°F) potable water.

   B. Sanitation Tank - Fill with a chlorine sanitizing solution in the strength of 1 ounce of household bleach (sodium hypochlorite) to 1 gallon of cold (ambient) potable water (410 PPM).

6. Repeat the following procedure on each of the unit's syrup product lines:

   A. Connect the cleaning tank to the syrup line to be sanitized and to the CO_2 system.

   B. Energize the beverage faucet until the liquid dispensed is free of any syrup.

   C. Disconnect the cleaning tank and hook-up the sanitizing tank to the syrup line and CO_2 system.

   D. Energize the beverage faucet until the chlorine sanitizing solution is dispensed through the faucet. Flush at least 2 cups of liquid to insure that the sanitizing solution has filled the entire length of the syrup line.

E. Disconnect the sanitizing tank. Hook up the product tank to the syrup line and to the CO_2 system.

F. Energize the faucet to flush the sanitizing solution from the syrup line and faucet. Continue draw on faucet until only syrup is dispensed.

7. Repeat Step 2 in reverse order to turn on the carbonator. Dispense at least 1 cup of beverage from each faucet. Check taste. Continue to flush, if needed, to obtain satisfactory tasting drink.

GATE RESTRICTOR PLATE

C A U T I O N

Disconnect power to dispenser before installing, removing or adjusting this kit.

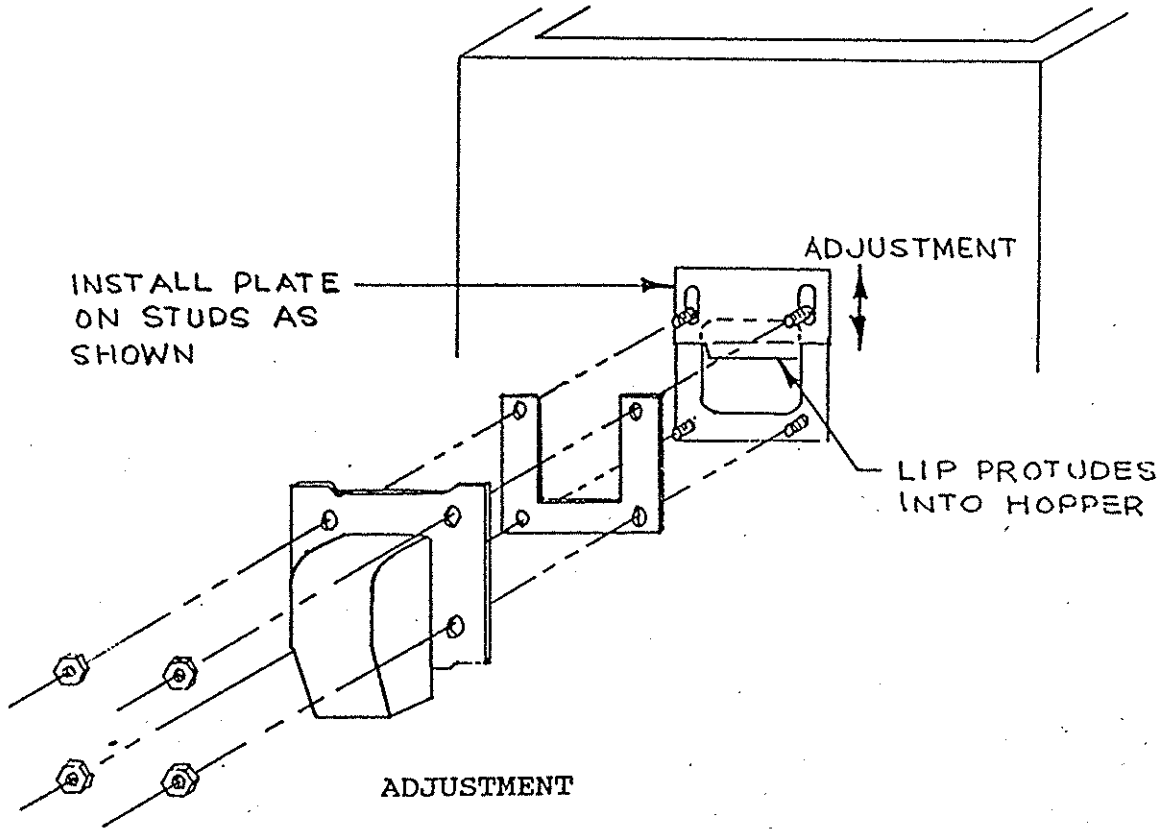

This dispenser is provided with a gate restrictor plate, installed in its highest position. This plate adjusts the rate of ice flow from the dispenser. In applications using buckets, carafes or other large containers, the plate may be removed entirely for maximum ice flow. For glasses and cups, the plate may be adjusted downward to reduce the flow of ice. The best position depends on the type of ice being used and the size container and must be found by trial and error. Adjustment is made by loosening the upper two ice chute retaining nuts, sliding the restrictor plate to the desired position and re-tightening the nuts.

MAINTENANCE

The following dispenser maintenance should be performed at the intervals indicated:

DAILY (or as required)

Remove foreign material from vending area sink to prevent drain blockage.

WEEKLY (or as required)

Clean the vending area. Check for proper water drainage from the vending area sink.

MONTHLY

Clean and sanitize the hopper interior (see CLEANING INSTRUCTIONS).

If the dispenser fails to dispense ice when operated, check that the hopper has ice in it and that power is being supplied to the unit. If the problem persists, check the following:

1. Determine if the agitator is rotating (check for the sound of ice movement in the hopper).
2. Observe whether the gate is operating.

After checking the above, refer to the TROUBLESHOOTING GUIDE for possible problem causes and corrective action.

TROUBLESHOOTING GUIDE

Should your unit fail to operate properly, check that there is power to the unit and that the hopper contains ice. If the unit still does not dispense, check the following chart under the appropriate symptoms to aid in locating the defect.

SYMPTOM	POSSIBLE CAUSE
1. Blown fuse or circuit breaker.	1. Short circuit in wiring. 2. Defective gate solenoid. 3. Defective agitator motor.
2. Gate does not open. Agitator does not turn.	1. No power. 2. Bent depressor plate (does not actuate switch). 3. Defective dispensing switch.
3. Gate does not open or is sluggish. Agitator turns.	1. Defective gate solenoid. 2. Weak gate spring.
4. Gate opens. Agitator does not turn.	1. Agitator motor protector tripped. 2. Defective agitator motor. 3. Defective agitator relay.
5. Ice dispenses continuously.	1. Stuck or bent depressor plate (does not release switch). 2. Defective dispensing switch. 3. Improper switch installation.
6. Slushy ice. Water in hopper.	1. Blocked drain. 2. Unit not level. 3. Ice maker malfunction.
7. Ice solidified in hopper or ice at rear corner only.	1. Defective or improperly adjusted ice maker thermostat.
8. No ice in hopper.	1. Ice maker malfunction.
9. Ice packed in hopper.	1. Defective or improperly adjusted ice maker control (not shutting of).
10. Beverages do not dispense.	1. No 24 volt power to faucets. 2. No C02 pressure.

TROUBLESHOOTING GUIDE
PAGE TWO OF TWO

SYMPTOM	POSSIBLE CAUSE
11. Beverages too sweet.	1. Carbonator not working. 2. No CO_2 pressure in carbonator. 3. Faucet brix requires adjusting.
12. Beverages not sweet enough	1. Empty syrup tank. 2. Faucet brix requires adjusting.
13. Beverages not cold (units with built-in cold plate)	1. Unit standing with no ice use - no ice in cold plate cabinet.

Refer to manufacturer's instructions for troubleshooting ice maker.

TJ200/250/300-B

WIRING DIAGRAM

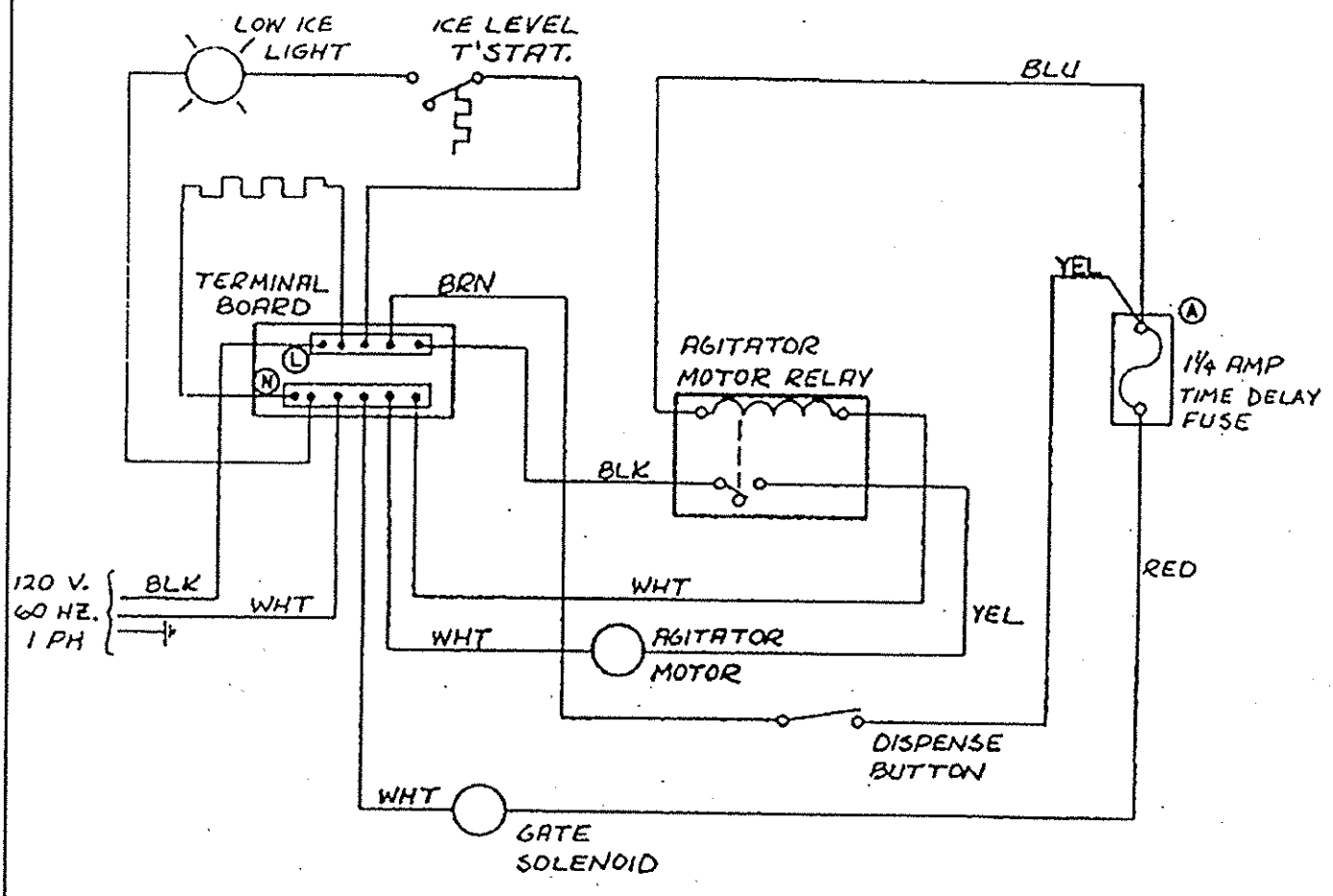

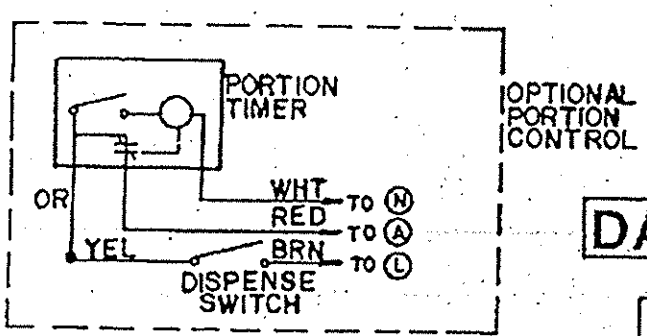

SERVICE INFORMATION

DANGER: ELECTRIC SHOCK HAZARD. DISCONNECT POWER BEFORE SERVICING UNIT.

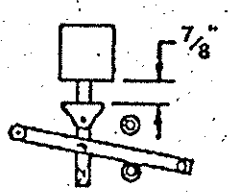

SOLENOID ADJUSTMENT

WHEN REPLACING SOLENOID ADJUST TO 7/8 AS SHOWN BEFORE TIGHTENING MOUNTING SCREWS.

TJ200/250/300-BC, AB, ABC, KB, KBC

WIRING DIAGRAM

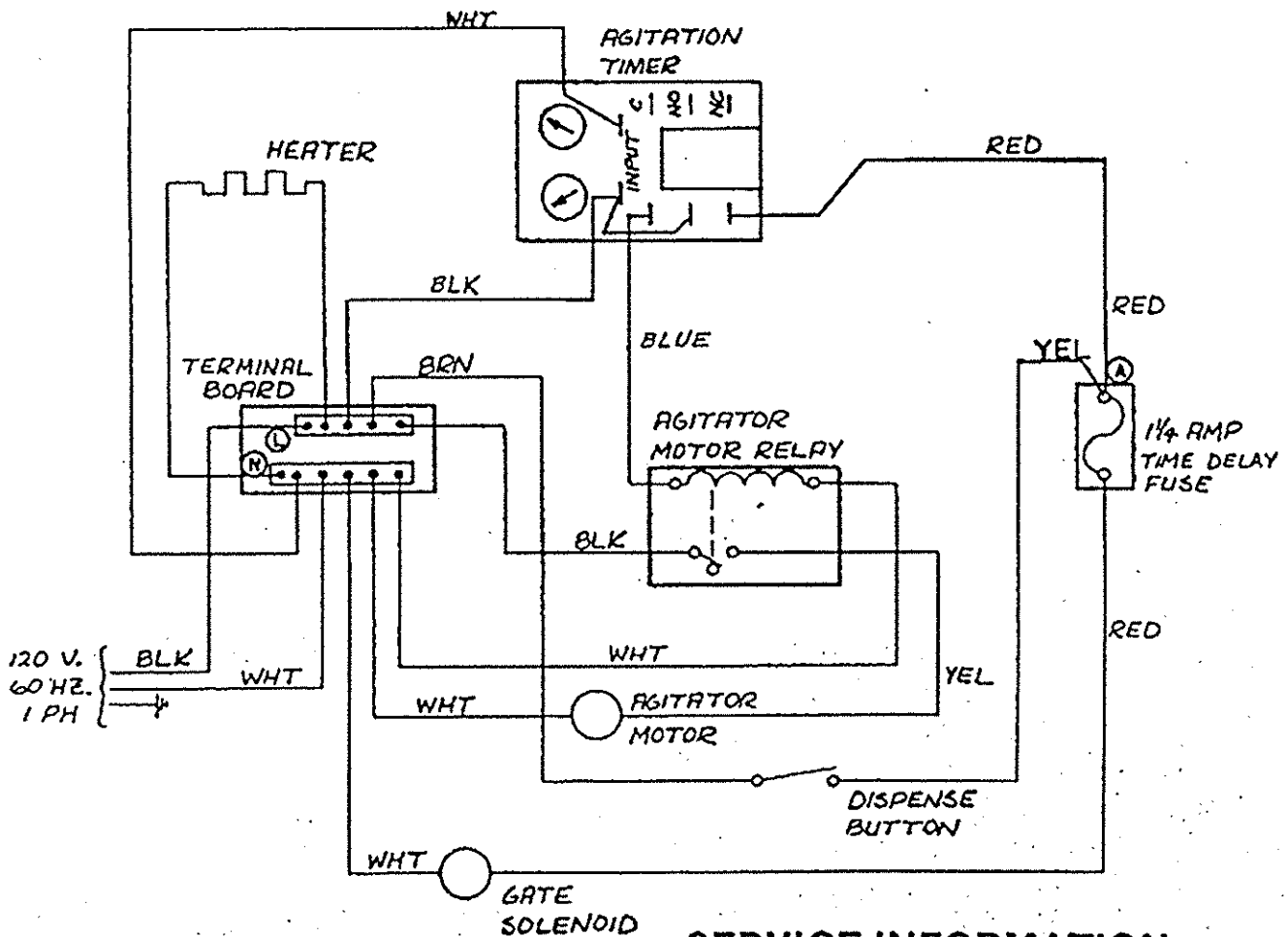

SERVICE INFORMATION

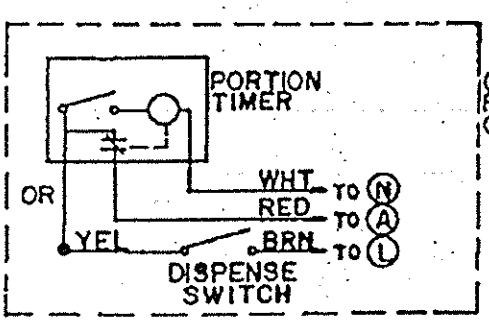

OPTIONAL PORTION CONTROL

DANGER: ELECTRIC SHOCK HAZARD. DISCONNECT POWER BEFORE SERVICING UNIT.

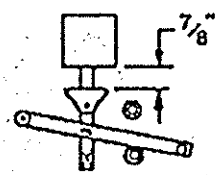

SOLENOID ADJUSTMENT

WHEN REPLACING SOLENOID ADJUST TO 7/8 AS SHOWN BEFORE TIGHTENING MOUNTING SCREWS.

BEVERAGE SYSTEM WIRING

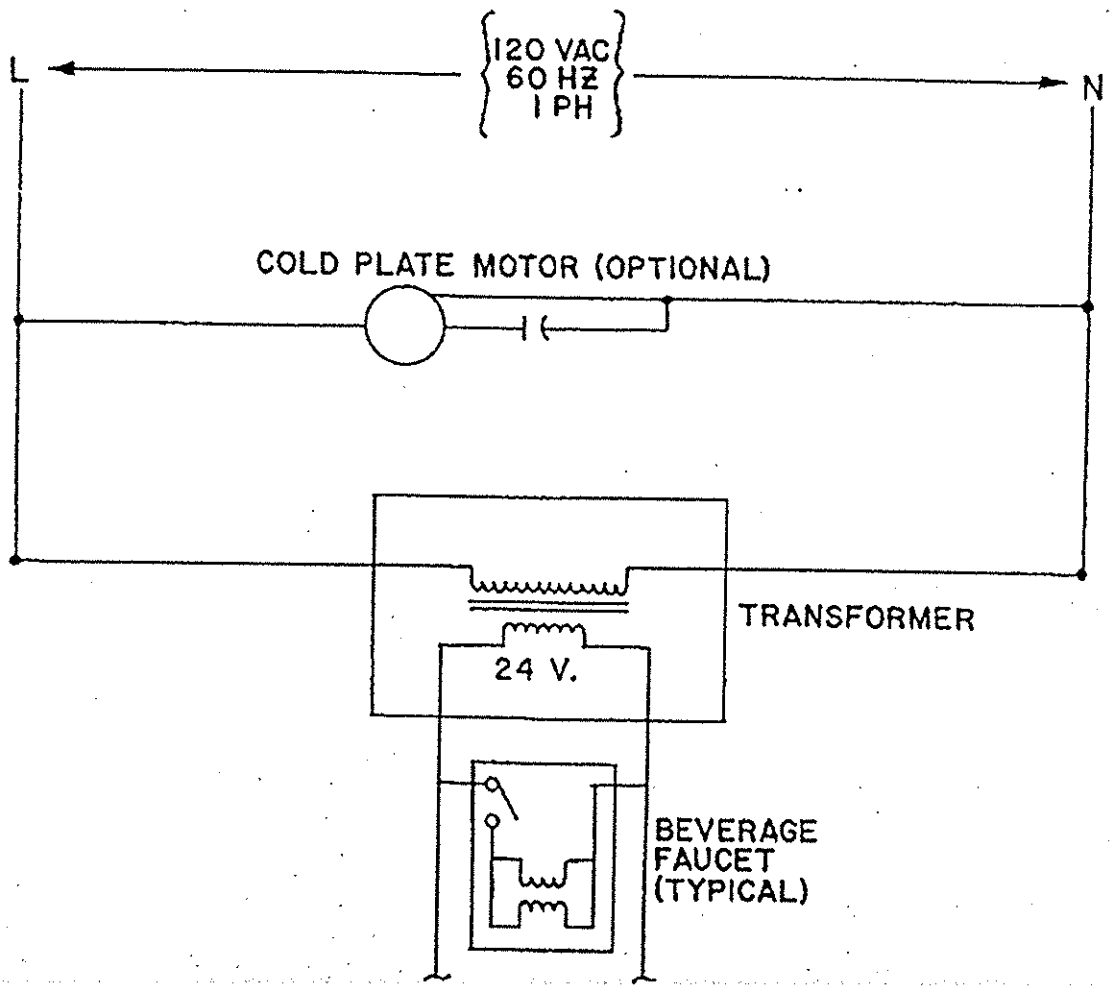

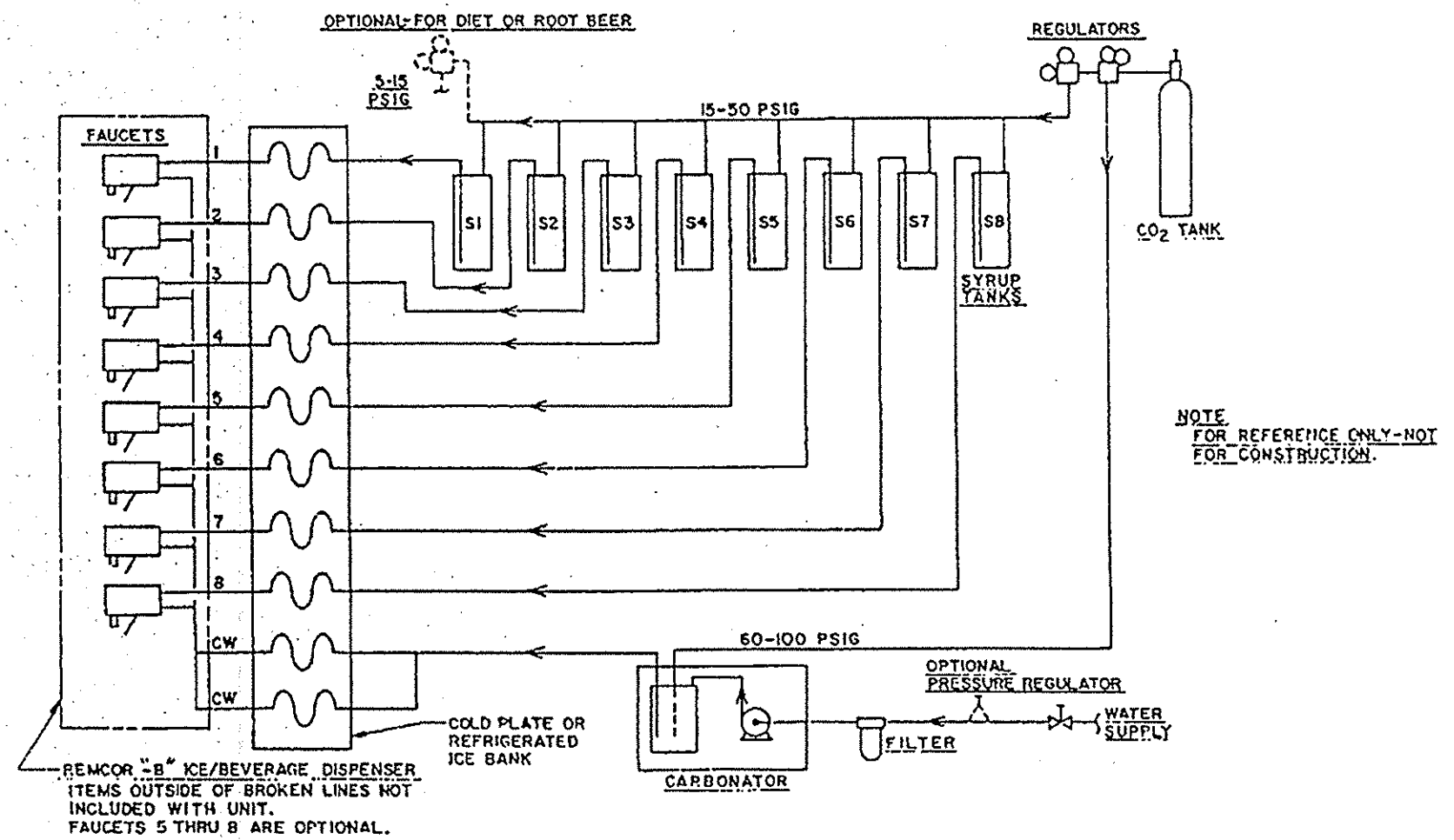

BEVERAGE SYSTEM SCHEMATIC

"–B" MODELS

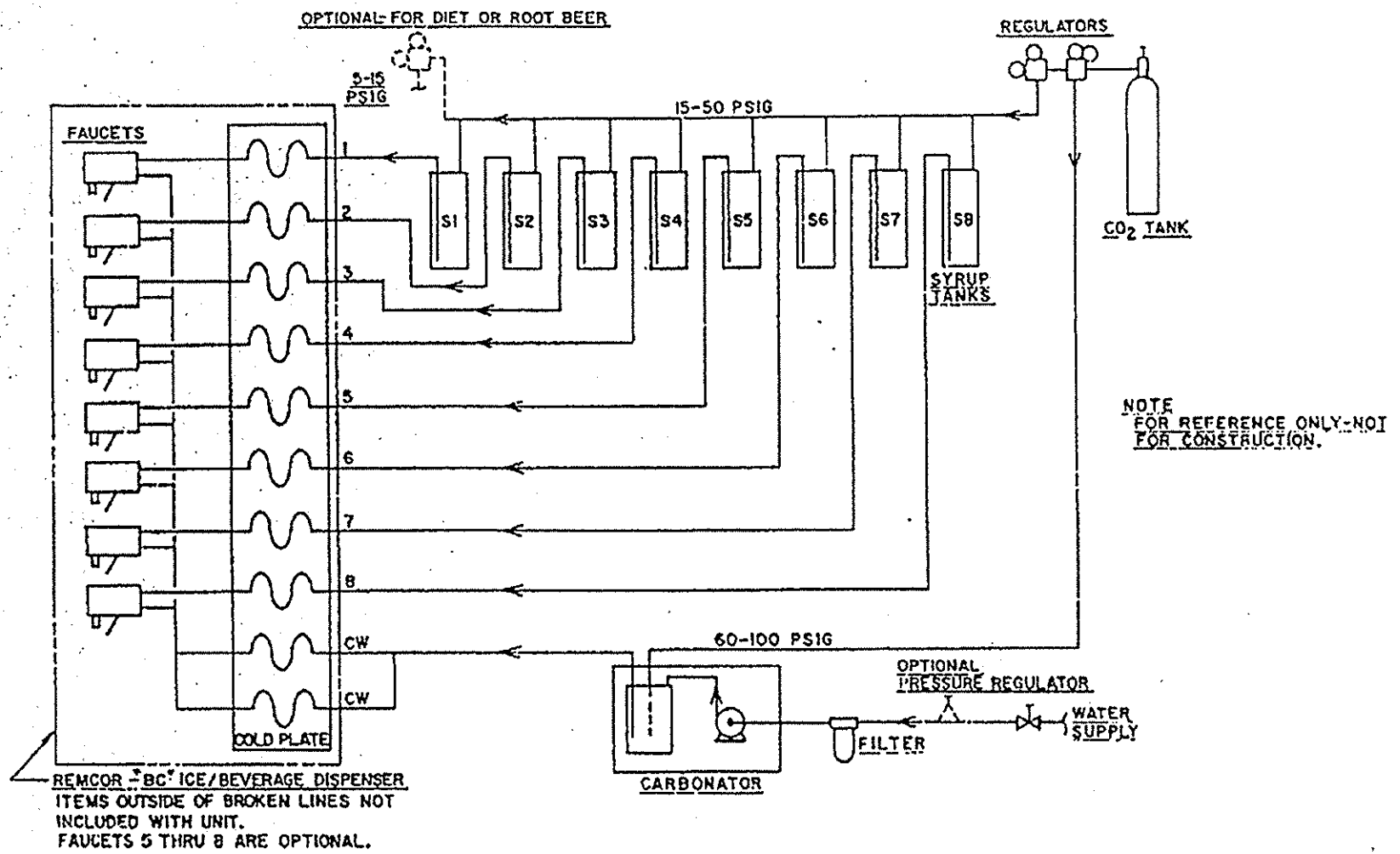

BEVERAGE SYSTEM SCHEMATIC

"–BC" MODELS

MOUNTING TEMPLATE

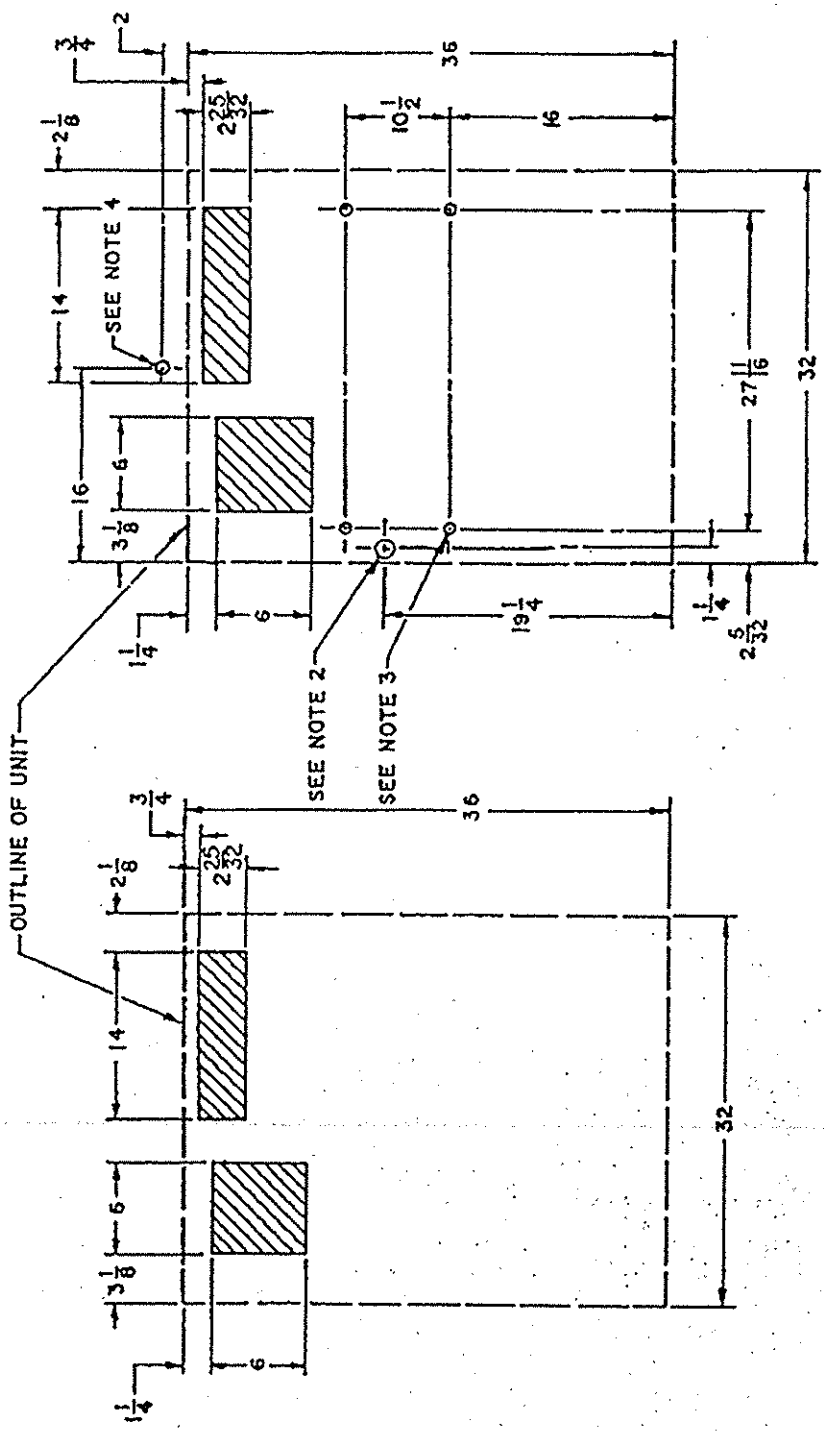

NOTES

1. SHADED AREAS INDICATE OPENINGS IN CABINET BOTTOM NEEDED FOR UTILITIES, ICE FEED TUBE, OR BEVERAGE TUBING.
2. 1 1/8 DIA. ACCESS HOLE FOR ELECTRICAL SUPPLY CONDUIT.
3. FOUR 3/8 DIA. HOLES FOR SECURING UNIT TO COUNTER.
4. 1/2 DIA. ACCESS HOLE FOR ICEMAKER CONTROL BULB.

MOUNTING TEMPLATE
MODEL TJ300

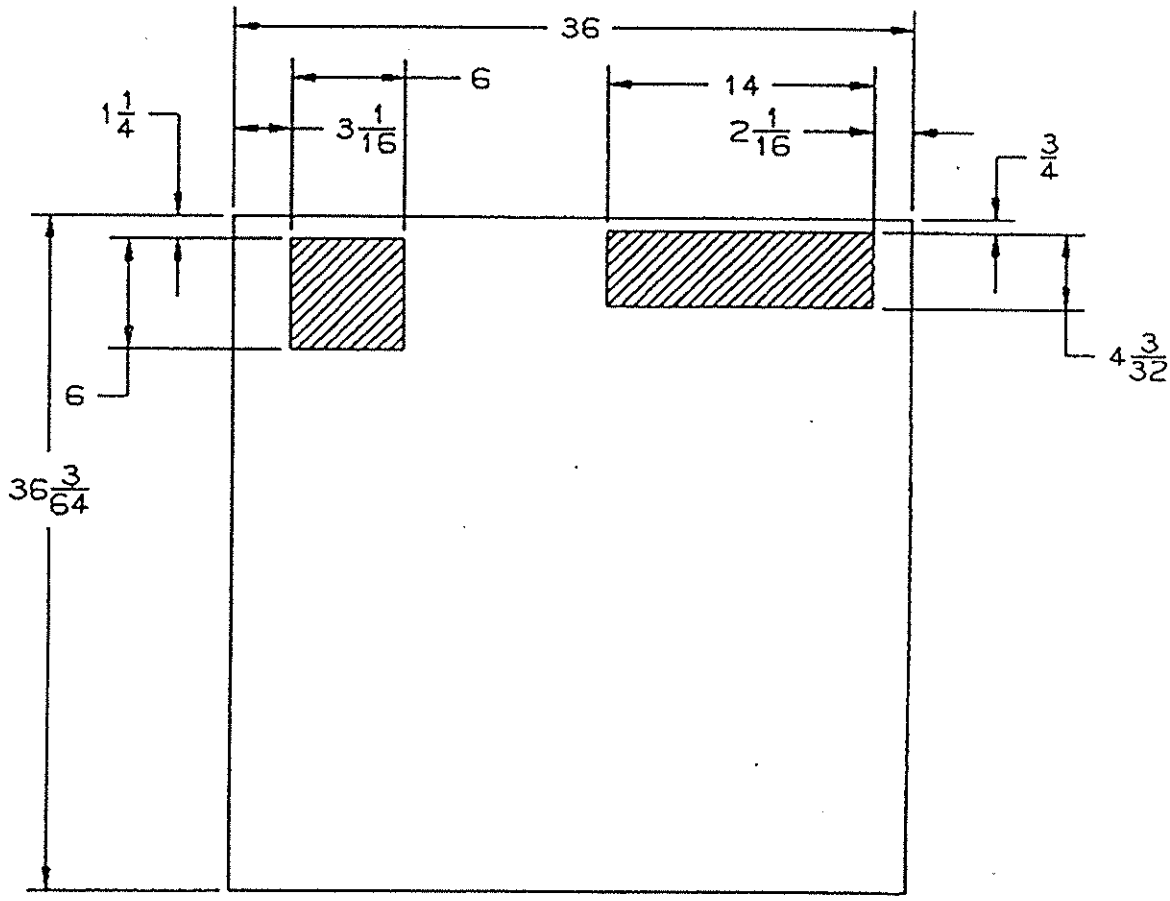

NOTE: SHADED AREAS INDICATE OPENINGS IN COUNTER REQUIRED FOR UTILITIES AND BEVERAGE TUBING.

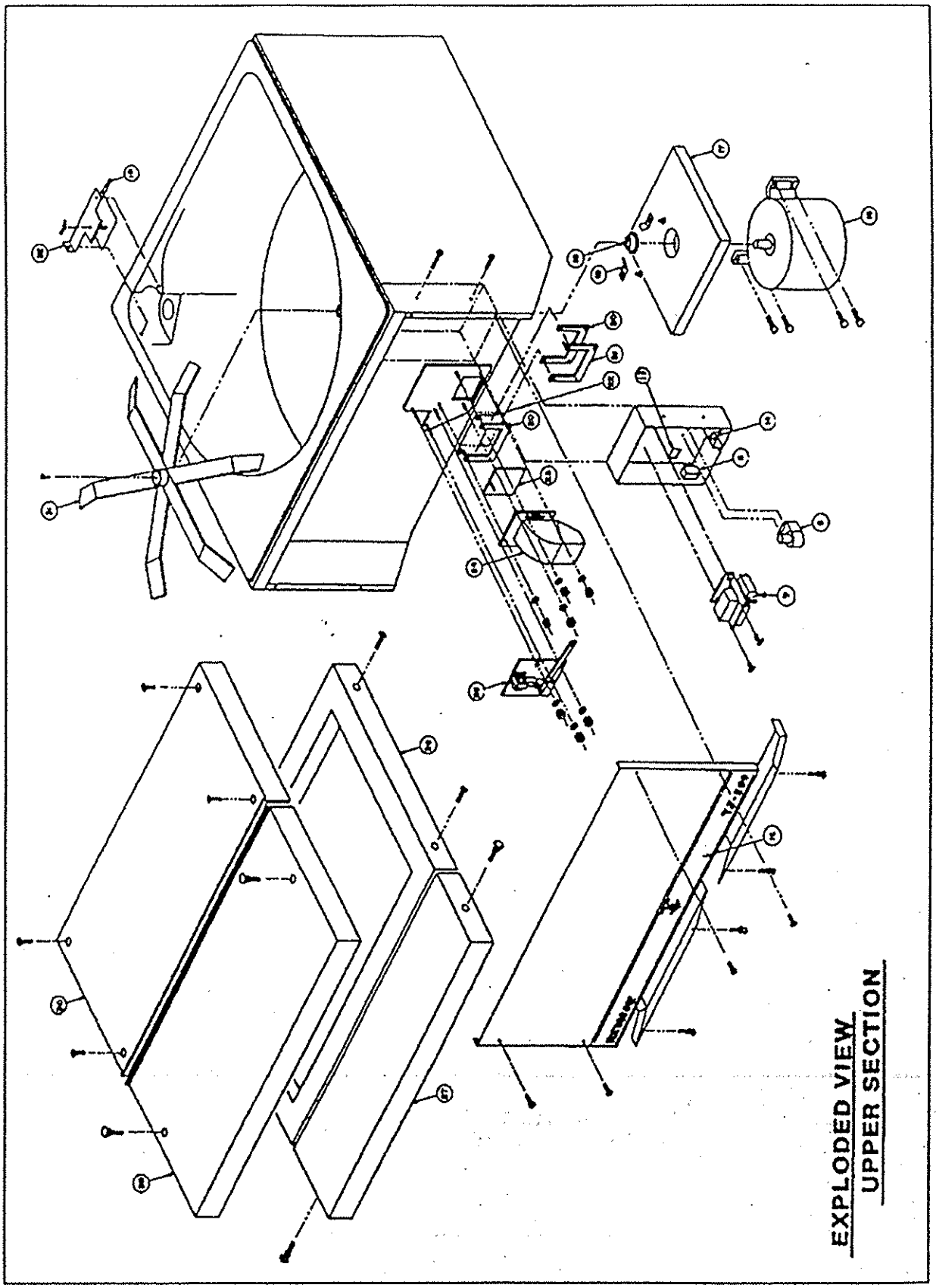

EXPLODED VIEW
UPPER SECTION

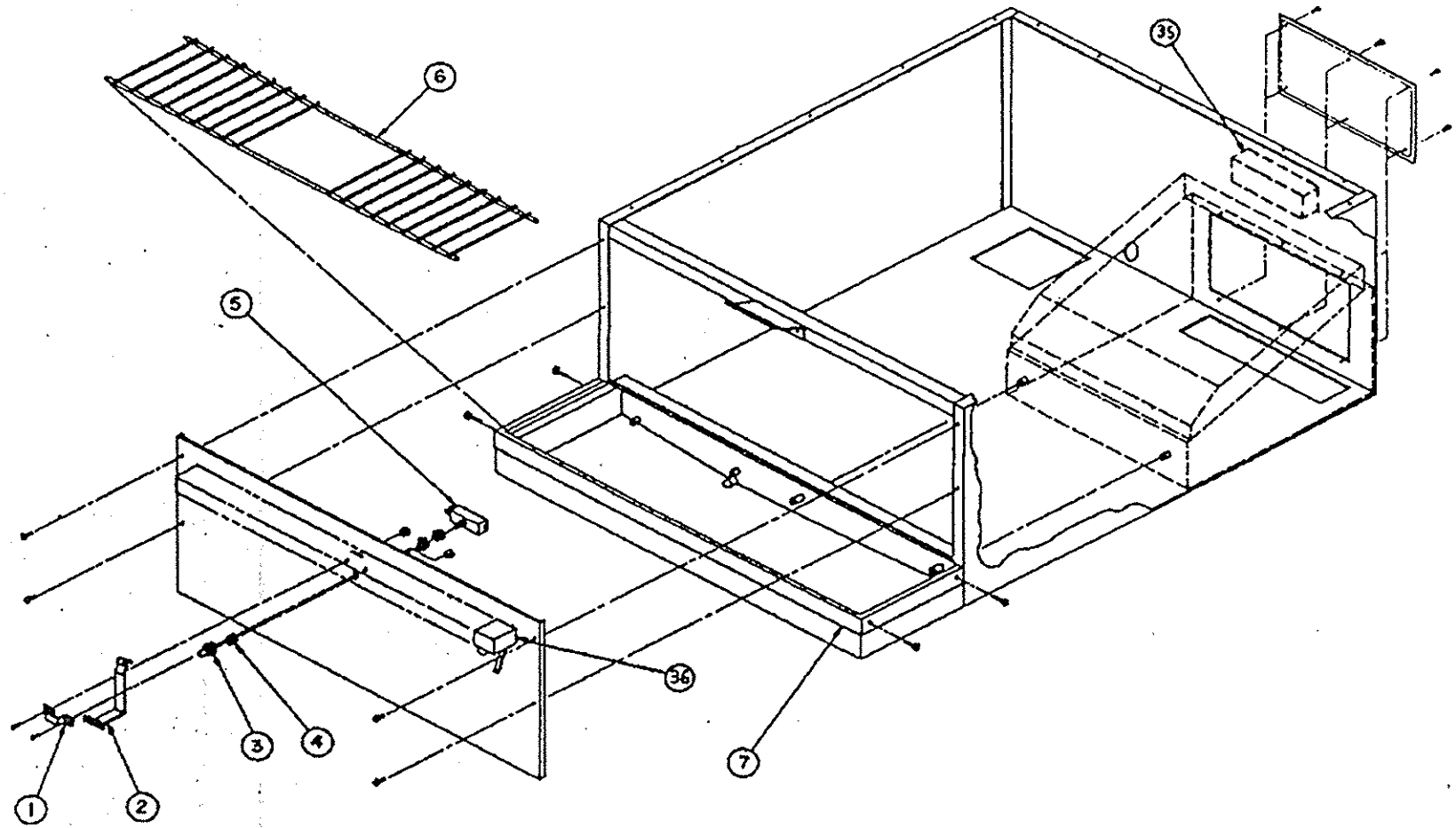

EXPLODED VIEW—LOWER SECTION

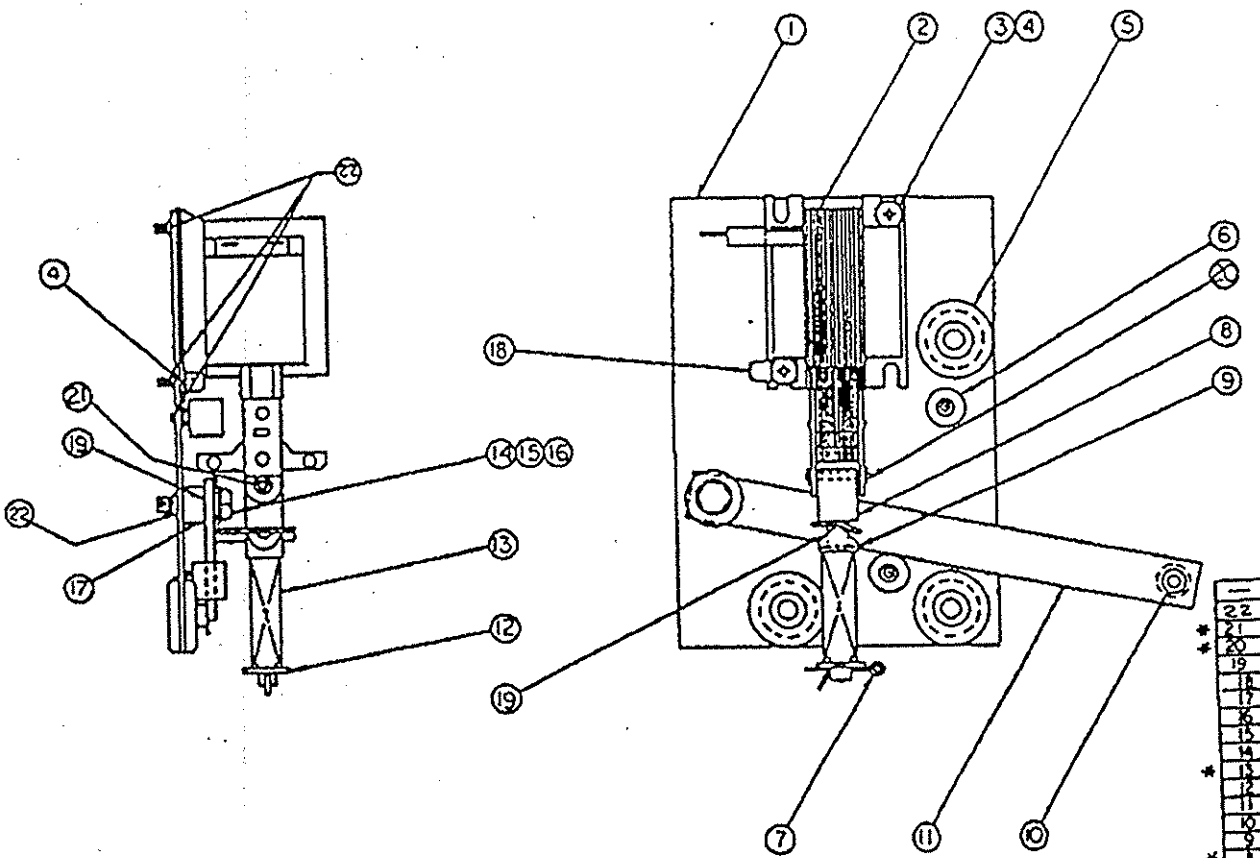

* PARTS SUPPLIED WITH REBUILDING KIT.

\# 31551 SOLENOID SUPPLIED WITH ITEMS 20 & 21

	ITEM	PT NO	QTY	DESCRIPTION
	—	70438		REBUILDING KIT *
	22	50188	~	LOCTITE
*	21	70433	2	RETAINER RING
*	20	21592	1	SOLENOID LINKAGE PIN
	19	50305	~	LUBRICANT
	18	50227	1	¼ QUICK CONNECT TAB
	17	10077	1	PIVOT BEARING
	16	70066	1	¼ FLATWASHER
	15	70048	1	¼ LOCKWASHER
	14	70263	1	¼-20 × ¾ HEX HD SCREW
*	13	70422	1	SPRING
	12	70041	1	FLATWASHER
	11	21990	1	GATE LIFT ARM
	10	50754	1	GATE ARM BEARING
	9	10081	1	GATE LIFT ROD BUSHING
	8	10080	1	GATE LIFT ROD
**	7	70423	1	COTTER PIN
**	6	50769	2	BUMPER ASSY.
	5	50752	2	ISOLATOR
	4	70021	2	NO. 8 LOCKWASHER
	3	70171	2	8-32 × ½ PHIL. TR HD SCREW
#	2	31551	1	SOLENOID
	1	228892	1	SOLENOID MTG PLATE

SOLENOID ASS'Y

PARTS LIST

ITEM	DESCRIPTION	PART NO. TJ200/ 250B, BC	PART NO. TJ200/ 250AB, ABC	PART NO. TJ200/ 250KB, KBC	PART NO. TJ300 KBC
1	Depressor Retainer	22644	22644	22644	26244
2	Depressor Lever	22777	22777	22777	22777
3	Switch Boot	31007	31007	31007	31007
4	Boot Adapter	31163	31163	31163	31163
5	Dispensing Switch	30895	30895	30895	30895
6	Sink Grill	70496	70496	70496	70710
7	Sink Sink (Cold Plate Units)	51024 51032	51024 51032	51024 51032	51646 -----
8	Mercury Relay	31375	31375	31375	31375
9	Agitation Timer	-----	31763	31763	31763
10	Bracket-Ice Deflector	-----	22441	-----	-----
11	Ice Level Thermostat	31001	-----	-----	-----
12	"Press for Ice" Label (TJ200) "Press for Ice" Label (TJ250)	90681 90901	90681 90901	90681 90901	91134 -----
13	Terminal Board	30960	30960	30960	30960
14	Ice Level Light	31205	-----	-----	-----
15	Transformer-Beverage Faucets	31091	31091	31091	31091
16	Agitator Motor	31197	31197	31197	31617
17	Insulation (Agitator Motor)	50967	50967	50967	50967
18	Motor Shaft Seal	50891	50891	50891	51101
19	Bracket-Hopper Seal	22402	22402	22402	22402

ITEM	DESCRIPTION	PART NO. TJ200/ 250B, BC	PART NO. TJ200/ 250AB, ABC	PART NO. TJ200/ 250KB, KBC	PART NO. TJ300 KBC
20	Gate Gasket	50770	50770	50770	50770
21	Ice Diverter	-----	22519	-----	-----
22	Gate Restrictor	22081	22081	22081	22081
23	Gate Slide	21491	21491	21491	21491
24	Ice Chute	50751	50751	50751	50751
25	Solenoid Assembly (Page 23)				
	Solenoid	31551	31551	31551	31551
	Rebuilding Kit	70438	70438	70438	70438
27	Lid-Removable	-----	-----	22082	25454
28	Cover Assembly-Rear	-----	-----	22084	25452
29	Lid Removable	50962	50962	-----	-----
30	Cover Assembly-Rear	50963	50963	-----	-----
31	Agitator (TJ200)	22047	22047	22047	25744
	Agitator (TJ250)	23692	23692	23692	-----
32	Deflector Assembly	-----	22339	-----	-----
35	Cold Plate Agitator Motor	-----	31116	-----	-----
	Agitator-C.P. Motor	-----	22857	-----	-----
	Capacitor-C.P. Agitator Motor	-----	31134	-----	-----
36	Beverage Faucets				
	McCann "Pepsi"	40366	40366	40366	40366
	McCann "Coke"	40324	40324	40324	40324
	McCann Non-Carbonated	40391	40391	40391	40391
	McCann-Fast Flow	40444	40444	40444	40444
	Cornelius "Pepsi"	40400	40400	40400	40400
	Cornelius-Fast Flow	40445	40445	40445	40445
	Dole	40404	40404	40404	40404
	Dole-Fast Flow	40483	40483	40483	40483
	Concessions	40446	40446	40446	40446
	Concessions-Fast Flow	40447	40447	40447	40447
	Beverage Drip Shield	-----	-----	-----	51802

REMCOR® PRODUCTS COMPANY

2-YEAR ICE DISPENSER WARRANTY

REMCOR Products Company warrants to the original purchaser of each new REMCOR sanitary ICE DISPENSER, for a period of 24 months from date of shipment that all parts shall be free from defects in material and workmanship under normal use and service.

Under this warranty, as defective part (or parts) is to be returned to REMCOR Products Company, 500 Regency Drive, Glendale Heights, Illinois 60139-2268 (Phone 708/980-6900) and shall be limited exclusively to repairing or replacing F.O.B. Factory, such part or parts which it concludes upon examination to be defective under the terms of this warranty. Return of any part disassembled will void warranty on any part. The decision of our Service Department regarding the warranty of parts will be final.

The warranties defined herein shall not apply to any damage or defects created or arising from accident, misapplication, abuse, misuse, neglect, alteration, acts of vandalism, flood, fire, acts of God or any other occurences beyond the control of REMCOR. Warranty validity also requires that all instructions have been followed and adhered to as provided in the Owner's Manual included with each unit.

REMCOR's warranty responsibility ceases if shipment is not received by you in good order and in accordance with quantity shown on Invoice or Packing Sheet; if you accept shipment from the Transportation Company in damaged condition without having a proper notation made by the Station Agent you do so at your own risk. If cartons are in apparent good order, but upon opening, contents are found to be damaged; call agent or adjuster to view same and have him mark the freight bill relative to such concealed damage. This procedure must be executed within fifteen days after delivery.

Prior to returning any material, (part or unit), a Return of Material Authorization (RMA) must be obtained. To obtain this authorization provide the reason for return, model number, serial number and part number. Either call or write REMCOR's Parts Service Department and an Authorization number and tag will then be issued - this tag must accompany the material returned. No representative, dealer, distributor or any person is authorized to make any other decisions regarding the warranty or liability in accordance with REMCOR's Warranty. Any materials that do not have a pre-issued Return Material Authorization number when received will be refused by REMCOR, and returned to the sender (freight collect).

REMCOR Products Company will not honor, or assume any responsibility for any expenses (including labor), incurred in the field for the repair of equipment covered in our Warranty unless authorization has been granted from REMCOR's Service Department prior to work being performed. The request for repair Warranty work will only apply to units shipped from REMCOR within a thirty day time period of request. It will further be at the discretion of REMCOR to decide if said labor will be reimbursed in full, or partial payment. REMCOR Products Company will also control the right to decline payment - all decisions will be based on circumstances prevailing. Charges for a repeat service call on the same unit to rectify the same problem previously corrected shall not be honored. REMCOR Products shall retain the right to select, or recommend another company to complete the necessary repair work.

CAUTION

The inherent nature of ice may cause spillage onto counter or floor areas. The Owner or Operator is cautioned to Maintain these areas in a clean, ice-free condition.

REMCOR PRODUCTS COMPANY 500 Regency Drive Glendale Heights, IL 60139-2268 (708) 980-6900