SELF-CONTAINTED FLAKED ICE MAKER

Model: Series 200, 525, 725 (R404A Refrigerant)

Service Manual

Series 200

Release Date: May 13, 2004
Publication Number: 166240010SER
Revision Date: March 21, 2014
Revision: B

Visit the Cornelius web site at www.cornelius.com for all your Literature needs.

The products, technical information, and instructions contained in this manual are subject to change without notice. These instructions are not intended to cover all details or variations of the equipment, nor to provide for every possible contingency in the installation, operation or maintenance of this equipment. This manual assumes that the person(s) working on the equipment have been trained and are skilled in working with electrical, plumbing, pneumatic, and mechanical equipment. It is assumed that appropriate safety precautions are taken and that all local safety and construction requirements are being met, in addition to the information contained in this manual.

This Product is warranted only as provided in Cornelius' Commercial Warrant applicable to this Product and is subject to all of the restrictions and limitations contained in the Commercial Warranty.

Cornelius will not be responsible for any repair, replacement or other service required by or loss or damage resulting from any of the following occurrences, including but not limited to, (1) other than normal and proper use and normal service conditions with respect to the Product, (2) improper voltage, (3) inadequate wiring, (4) abuse, (5) accident, (6) alteration, (7) misuse, (8) neglect, (9) unauthorized repair or the failure to utilize suitably qualified and trained persons to perform service and/or repair of the Product, (10) improper cleaning, (11) failure to follow installation, operating, cleaning or maintenance instructions, (12) use of "non-authorized" parts (i.e., parts that are not 100% compatible with the Product) which use voids the entire warranty, (13) Product parts in contact with water or the product dispensed which are adversely impacted by changes in liquid scale or chemical composition.

Contact Information:

To inquire about current revisions of this and other documentation or for assistance with any Cornelius product contact:

www.cornelius-usa.com

800-238-3600

Trademarks and Copyrights:

This document contains proprietary information and it may not be reproduced in any way without permission from Cornelius.

This document contains the original instructions for the unit described.

CORNELIUS INC
101 Regency Drive
Glendale Heights, IL
Tel: + 1 800-238-3600

Printed in U.S.A.

TABLE OF CONTENTS

Introduction **1**

Specifications 200 . . . . . **2**
Ice Production Capacity (Approximate) 2
200 3

Specifications 525 . . . . . **4**
Ice Production Capacity (Approximate) 4
525 5

Specifications 725 . . . . . **6**
Ice Production Capacity (Approximate) 6
725 6

Electrical Circuit **7**
Circuit Description 7
On-Off Switch/Circuit Breaker 7
Bin Thermostat 7
High Pressure Control 7
Gearmotor Start Relay 7
Power Relay/Contactor 7
Fan Cycling Switch 7
Delay Thermostat 7
Compressor Start Relay 7
Potential Relays 8
Capacitors - General 8

Maintenance **9**
Sanitizing and Cleaning Procedure 9
Water Treatment 10
Winter Storage 10
Cleaning the Condenser (Air Cooled) 10

Troubleshooting **15**

INTRODUCTION

We have strived to produce a quality product. The design has been kept simple thus insuring trouble-free operation.

This manual has been prepared to assist servicemen and users with information concerning installation, construction and maintenance of the ice making equipment. The problems of the serviceman and user have been given special attention in the development and engineering of our ice makers.

If you encounter a problem which is not covered in this manual, please feel free to write or call. We will be happy to assist you in any way we can.

When writing, please state the model and serial number of the machine.

© 2004-2014, Cornelius Inc.

Publication Number: 166240010SER

SPECIFICATIONS 200

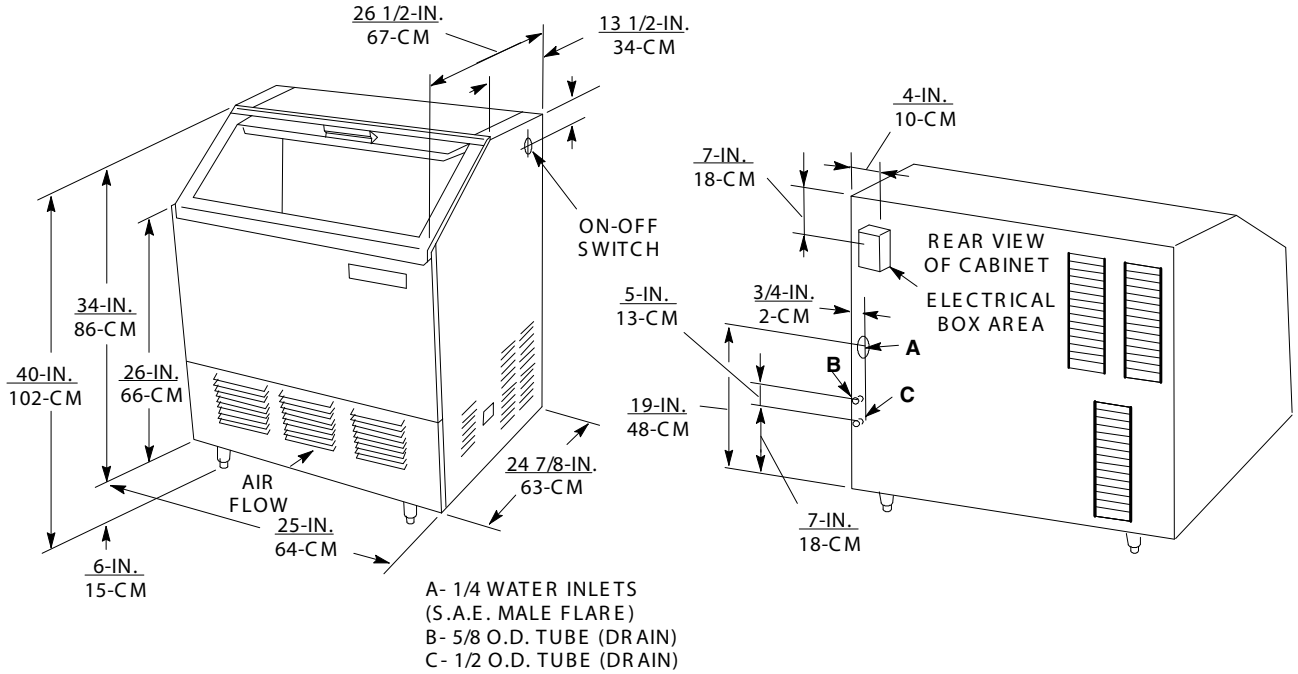

FIGURE 1. 200 SERIES SPECIFICATIONS

ICE PRODUCTION CAPACITY (APPROXIMATE)

AF–200–P(S)–SCR PRODUCTION CHART			
AIR TEMPERATURE	**WATER TEMPERATURE**		
	50°F/10°C	**70°F/21°C**	**80°F/27°C**
50°F/10°C	219 lbs/99 kgs	188 lbs/85 kgs	175 lbs/79 kgs
70°F/21°C	208 lbs/95 kgs	174 lbs/79 kgs	166 lbs/75 kgs
90°F/27°C	161 lbs/35 kgs	130 lbs/59 kgs	117 lbs/53 kgs

AF–200–P–SC50R PRODUCTION CHART			
AIR TEMPERATURE	**WATER TEMPERATURE**		
	50°F/10°C	**70°F/21°C**	**80°F/27°C**
50°F/10°C	234 lbs/106 kgs	206 lbs/94 kgs	197 lbs/90 kgs
70°F/21°C	213 lbs/97 kgs	190 lbs/86 kgs	180 lbs/82 kgs
90°F/27°C	183 lbs/83 kgs	164 lbs/75 kgs	156 lbs/71 kgs

 © 2004-2014, Cornelius Inc.

200

Compressor Model	Copeland JS25CIE–IAA–203 (115V 60HZ) Copeland AS13CIE–1AZ–908 (220V 50HZ)
Condenser	Air Cooled
Refrigerant Charge	8 oz. R–404a (115V 60HZ) 7 oz. R–404a (220V 50HZ)
Refrigerant Control (115V 60HZ)	Automatic Expansion Valve (28–PSI)
Refrigerant Control (220V 50HZ)	Automatic Expansion Valve (31–PSI)
Inlet Water Supply	1/4” SAE male flare
Voltage	115V 60HZ or 220V 50HZ
Gearmotor Electrical Rating	1/8 hp
Gearmotor Amp. Rating	2 amps (115V 60 HZ) 1 amp (220V 50HZ)
Total Amp. Draw	11.0 Amps (115V 60HZ) 4.0 Amps (220V 50HZ)
Maximum Fuse Size	15 Amp (115V 60HZ) 15 Amp (220V 50HZ)

© 2004-2014, Cornelius Inc.

Publication Number: 166240010SER

SPECIFICATIONS 525

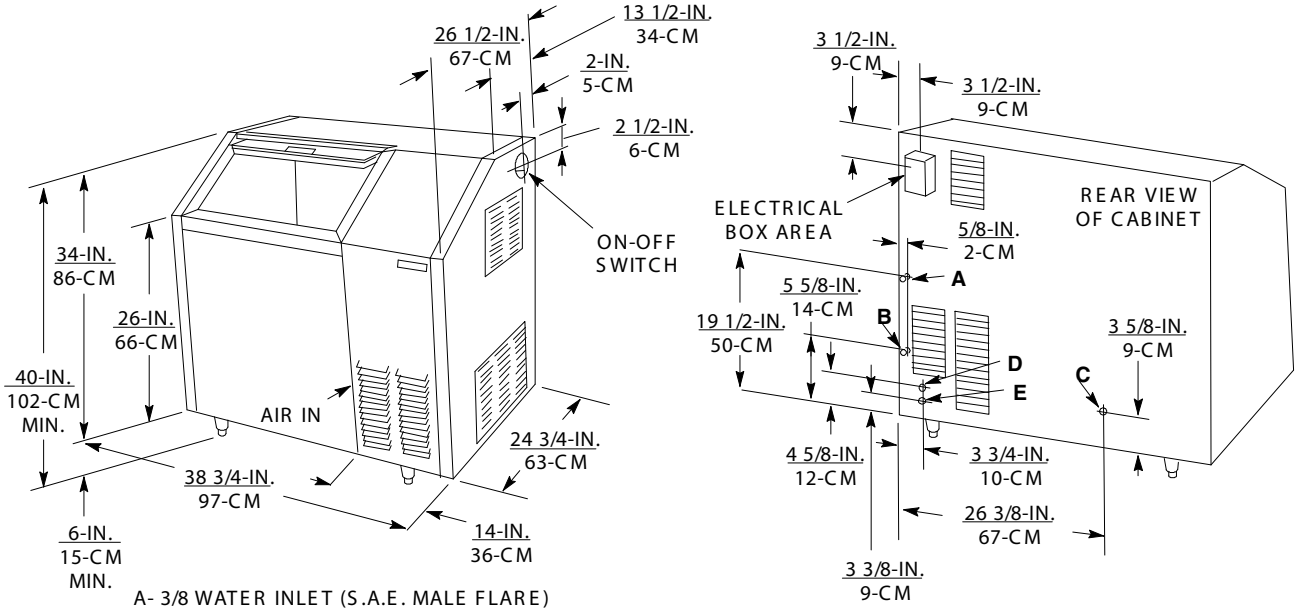

FIGURE 2. 525 SERIES SPECIFICATIONS

ICE PRODUCTION CAPACITY (APPROXIMATE)

AF–525–P(S)–SCR PRODUCTION CHART			
AIR TEMPERATURE	**WATER TEMPERATURE**		
	50°F/10°C	**70°F/21°C**	**80°F/27°C**
50°F/10°C	654 lbs/297 kgs	588 lbs/267 kgs	552 lbs/251 kgs
70°F/21°C	639 lbs/290 kgs	563 lbs/256 kgs	521 lbs/237 kgs
90°F/27°C	562 lbs/255 kgs	479 lbs/218 kgs	448 lbs/204 kgs

AF–525–P–SC50R PRODUCTION CHART			
AIR TEMPERATURE	**WATER TEMPERATURE**		
	50°F/10°C	**70°F/21°C**	**80°F/27°C**
50°F/10°C	629 lbs/286 kgs	528 lbs/240 kgs	494 lbs/225 kgs
70°F/21°C	621 lbs/282 kgs	525 lbs/239 kgs	489 lbs/222 kgs
90°F/27°C	493 lbs/224 kgs	414 lbs/188 kgs	387 lbs/176 kgs

 © 2004-2014, Cornelius Inc.

525

Compressor Model	Copeland RS43CIE–IAA–214 (115V 60HZ) Copeland RS43CIE–IAZ–214 (220V 50HZ)
Condenser	Air Cooled
Refrigerant Charge	17 oz. R-404a
Refrigerant Control	Automatic Expansion Valve (34–PSI)
Inlet Water Supply	3/8” SAE Male Flare
Voltage	115V 60HZ or 220V 50HZ
Total Amp Draw	15.5 Amps (115V 60HZ) 6.0 Amps (220V 50HZ)
Gearmotor Amp Draw	2 Amps (115V 60HZ) 1 Amp (220V 50HZ)
Gearmotor Electrical Rating	1/8 hp
Maximum Fuse Size	20 Amp (115V 60HZ) 15 Amp (220V 50HZ)

© 2004-2014, Cornelius Inc.

Publication Number: 166240010SER

SPECIFICATIONS 725

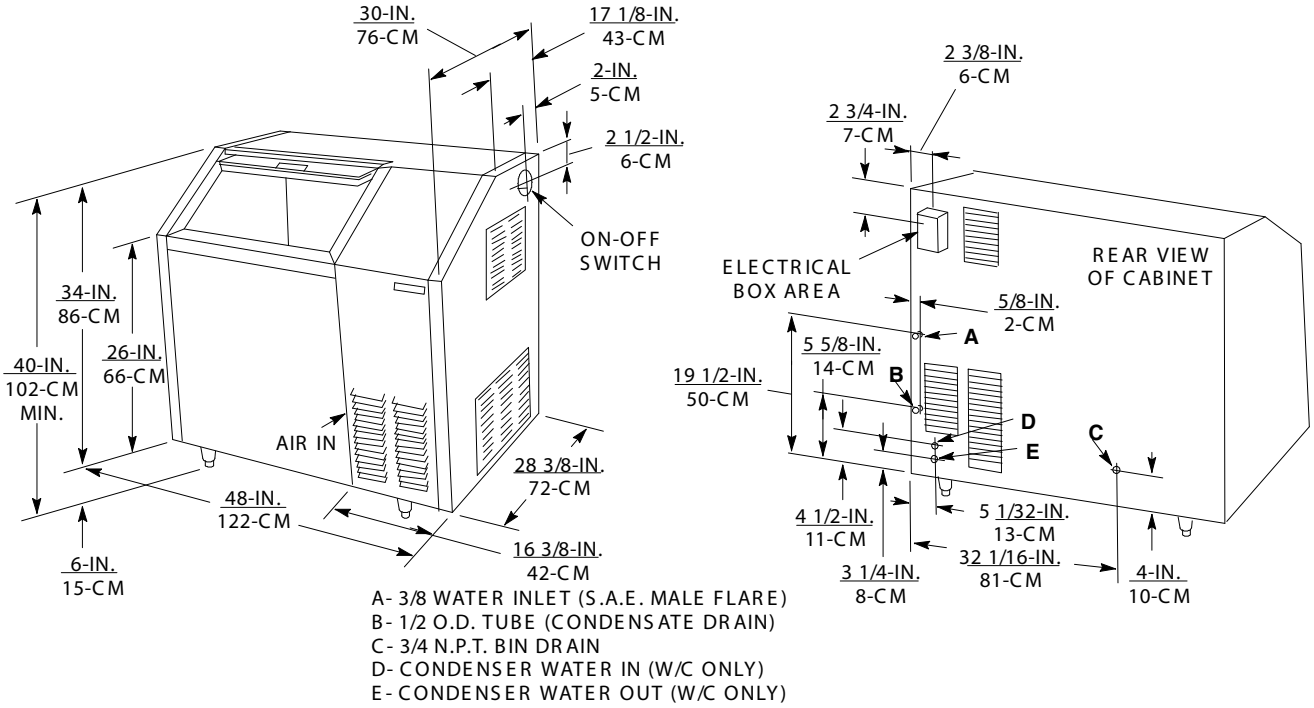

FIGURE 3. 725 SERIES SPECIFICATIONS

ICE PRODUCTION CAPACITY (APPROXIMATE)

AF–725–P–SCR PRODUCTION CHART			
AIR TEMPERATURE	**WATER TEMPERATURE**		
	50°F/10°C	**70°F/21°C**	**80°F/27°C**
50°F/10°C	654 lbs/297 kgs	588 lbs/267 kgs	552 lbs/251 kgs
70°F/21°C	639 lbs/290 kgs	563 lbs/256 kgs	521 lbs/237 kgs
90°F/27°C	562 lbs/255 kgs	479 lbs/218 kgs	448 lbs/204 kgs

725

Compressor Model	Copeland RS43CIE-IAA-214
Condenser	Air Cooled
Refrigerant Charge	17 oz. R-404a
Refrigerant Control	Automatic Expansion Valve (34–PSI)
Inlet Water Supply	3/8” SAE Male Flare
Voltage	115V 60HZ
Total Amp Draw	15.5 Amps
Gearmotor Amp Draw	2 Amps
Gearmotor Electrical Rating	1/8 hp
Maximum Fuse Size	20 Amp

 © 2004-2014, Cornelius Inc.

ELECTRICAL CIRCUIT

Circuit Description

As the manual on-off circuit breaker switch is pushed to ”on”, an electrical circuit is completed to the gearmotor via the circuit breaker gearmotor overload, power relay/contactor, gearmotor delay thermostat and the bin thermostat. After the previous circuit has been completed the condenser fan motor will start as will the compressor (via the high pressure control, the compressor starting relay and low ambient control).

On-Off Switch/Circuit Breaker

This switch interrupts power to the entire unit. The switch has a circuit breaker incorporated into its’ design. This circuit breaker will trip out in the event the gearmotor draws to high of amps. In such an event the power is interrupted to the unit. To reset the circuit breaker and reestablish power to the unit, push the switch to the “off” position and then back to the “on” position.

Bin Thermostat

This is electrically in ”series” with the ice making system. When the bin is full, the contact opens, terminating power to the machine.

High Pressure Control

Switch contact will open at 450 PSI for R404a breaking the circuit to the compressor. This control is manually re-settable.

Gearmotor Start Relay

This is a current type relay which means as the gearmotor run winding comes ”on” the line, the current draw initially is relatively heavy through the relay coil (coil is in series with run winding). It then acts like a normal relay and the N.O. start contact ”makes”, completing a circuit through the start capacitor to the start winding. As the gearmotor picks up speed, the amp draw through the relay coil drops off allowing the armature to return to its normal position (start contact ”opens”). This action removes the start winding from the circuit.

Power Relay/Contactor

This relay controls the compressor power only.

Fan Cycling Switch

The function of this switch is to maintain condensing pressures at a satisfactory level during-low ambient conditions. The switch breaks the circuit to the condenser fan motor at 205 PSI and makes the circuit at 275 PSI.

Delay Thermostat

This thermostat keeps the gearmotor running until the suction line temperature reaches 45° after the full bin switch terminates power to the power relay.

Compressor Start Relay

This is a current type relay and contains a N.O. contact which is connected in series with the start winding of the compressor. The relay coil is electrically in series with the run winding. When power is applied, the compressor draws high current which sets up a magnetic field in the magnet coil which causes the relay to operate, closing the relay contact. As the compressor approaches operating speed, the current flowing through the coil decreases, permitting the relay contact to open, thereby opening the starting circuit.

© 2004-2014, Cornelius Inc.

Publication Number: 166240010SER

Potential Relays

The potential relay is used as a compressor starting relay, The contact in the potential relay is N.C. The magnet coil is connected across (parallel) the start winding and is affected by induced voltage, generated by the start winding. As the compressor comes up to design speed, the voltage across the relay coil increases and at running speed is sometimes as much as 2 1/2 times the supply voltage. This voltage sets up a magnetic field which causes the relay to operate. The starting relay is calibrated to remove the start capacitor (open the starting circuit) at approximately 85% of the motor design speed.

NOTE: BOTH TYPES OF RELAYS ARE DESIGNED TO OPERATE WITHIN VERY NARROW LIMITS OF VOLTAGE AND CURRENT DICTATED BY MOTOR DESIGN, THEREFORE, WHEN MAKING A REPLACEMENT OF A RELAY ALWAYS PROVIDE AN EXACT REPLACEMENT, RECOMMENDED BY THE COMPRESSOR MANUFACTURER.

Capacitors - General

An electrical capacitor is a device which stores up electrical energy. Capacitors are used with single phase motors to provide starting torque and improve running characteristics; by feeding this energy to the start winding in step with the run winding.

Any capacitor has three (3) essential parts, two (2) of which are usually foil plates separated and insulated by the third part called the dielectric.

Two general types of capacitors are used with electric motors. The electrolytic starting capacitor usually uses a very thin film of oxide on the metallic plate as the dielectric. The running capacitor usually is of the liquid filled type.

 © 2004-2014, Cornelius Inc.

MAINTENANCE

IMPORTANT: THE FOLLOWING MAINTENANCE SHOULD BE PERFORMED AT LEAST EVERY SIX MONTHS ON FLAKED ICE MACHINES.

1. Check power supply with machine running for proper voltage.
2. Check water level in the float tank reservoir. Water level should be maintained at the top of the evaporator. Adjust if necessary. (See illustration and adjustment procedure)
3. Clean the air-cooled condenser coil with a stiff brush or vacuum cleaner (See procedure).

CAUTION: Condenser cooling fins are sharp, use care when cleaning.

4. Clean the ice storage bin and flush the bin drain at least once a month.
5. If a water conditioner is installed in the inlet water line, change, replace, or clean the filter, strainer or cartridge as required.
6. If heavy mineral deposits on the auger and evaporator shell are encountered due to bad local water conditions, follow sanitizing and cleaning procedure.
7. Loosen hold-down cam locks and remove gearmotor assembly.
8. Check thrust washer; replace if noticeably worn.
9. Lift out auger and examine for wear. The corkscrew auger guide bushing pressed into the drive block should be checked for wear. Replace if loose or if worn flat with auger drive block. If the Helix auger on the corkscrew auger round bar becomes flat on the inside more than 1/8 of an inch over a length of two inches or more it should be replaced.

NOTE: HELIX AUGERS DO HAVE MACHINED FLAT RELIEF SURFACES. DON'T CONFUSE THEM WITH WORN FLAT AREAS.

Check the insert in the bottom ring of the Helix auger and replace if excessively worn.

10. Check shell vertical strips for wear. Replace the shell if excessive wear is shown.
11. Check O-Ring, replace if worn or cut.
12. Re-assemble, steps 7 through 11.

CAUTION: In re-assembling the auger gearmotor, the hold down clamps must be tight and secure. In re-installing the evaporator shell, be absolutely sure that the "o" ring is not pinched off as this would cause a water leak around the base of the evaporator. Lubricate the "o" ring with food grade lubricant before re-assembling shell.

13. Check for alignment of ice chute. Make sure chute gasket is not blocking path of ice flow.
14. Check bin thermostat operation. In the mid-range position the bin thermostat will open at 42° and has a 6° differential.

Sanitizing and Cleaning Procedure

1. Turn unit off at switch in upper rear right side panel.
2. Turn water off and remove water hose from bottom of float chamber inside of ice bin and allow to drain from the evaporator via the hose end; or
3. Remove float chamber cover and while holding float up to prevent more water from entering the float chamber, remove water hose from float chamber and proceed to drain the float chamber and evaporator.
4. With water still off, restore water hose to float chamber and add 1/2 oz. of "sanitizer" (see note below). Turn water on.
5. Remove the bin door, float chamber cover, ice chute trim cover, two thumb screws and chute trim gasket.
6. Using soap, hot water, and a non-metallic bristle brush or plastic scouring pad, scrub the parts removed in step 4 as well as the interior of the ice bin, ice chute, thermowell, door tracks, ice bin top, and around bin opening.

© 2004-2014, Cornelius Inc.

NOTE: Use care when cleaning around thermowell sensing tube; the small capillary is easily broken. Rinse all parts in clean water.

7. In a 5 gallon bucket, mix a sanitizing solution of 1/2 oz. of sanitizer to 1 gallon of warm water (100° to 120° F).
8. Place all small, loose parts into the sanitizing solution and allow them to soak for 10 minutes.
9. Using a clean cloth and the sanitizing solution, wipe down the interior of the ice chute, thermowell door tracks, ice bin top, and around bin opening. Allow to air dry.
10. Reassemble the float chamber cover, ice chute gasket and cover, and bin door.
11. Turn unit switch on and allow machine to make ice for at least 1/2 hour then discard all of the ice. **DO NOT ALLOW ICE WITH SANITIZER IN IT TO BE USED.**

NOTE: APPROVED SANITIZER: Household bleach such as Hi-Lex or Clorox.

Water Treatment

During the freezing process, the impurities in the water have a tendency to be rejected.

However, the more dissolved solids in the water, the more troublesome the freezing operation will be. Bicarbonates in the water are the most troublesome of the impurities. These impurities will cause scaling on the evaporator, clogging of the float valve mechanism and other parts in the water system. If the concentration of impurities is high, wet mushy ice may be the result.

Parts of the ice maker, that are in contact with the water or ice, may corrode if the water is high in acidity. In some areas, water may have to be treated in order to overcome some of the problems that arise because of the mineral content.

Cornelius has water filter/treatment systems available to control impurities found in your water supply. Contact your local dealer for more information.

Winter Storage

If the unit is to be stored in an area where the temperature will drop below freezing, it is most important that all water lines be drained to prevent them from freezing and possible rupture.

To blow out the water line, disconnect the water supply at the cabinet inlet and use air pressure to force the water into the water reservoir pan. This can then be removed from the water pan.

WATER COOLED CONDENSER - To remove water from condenser unhook water supply and attach compressed air hose. Start machine. As head pressure reaches the appropriate level opening the water regulating valve, the compressed air will force the water out. Do not let the machine operate longer than necessary.

Cleaning the Condenser (Air Cooled)

In order to produce at full capacity, the refrigeration condenser must be kept clean. The frequency of cleaning will be determined by surrounding condition. A good maintenance plan calls for an inspection at least every two months.

Remove the unit compartment grill at the front. With a vacuum cleaner, remove all accumulated dust and lint that has adhered to the finned condenser.

CAUTION: Condenser cooling fins are sharp. Use care when cleaning.

 © 2004-2014, Cornelius Inc.

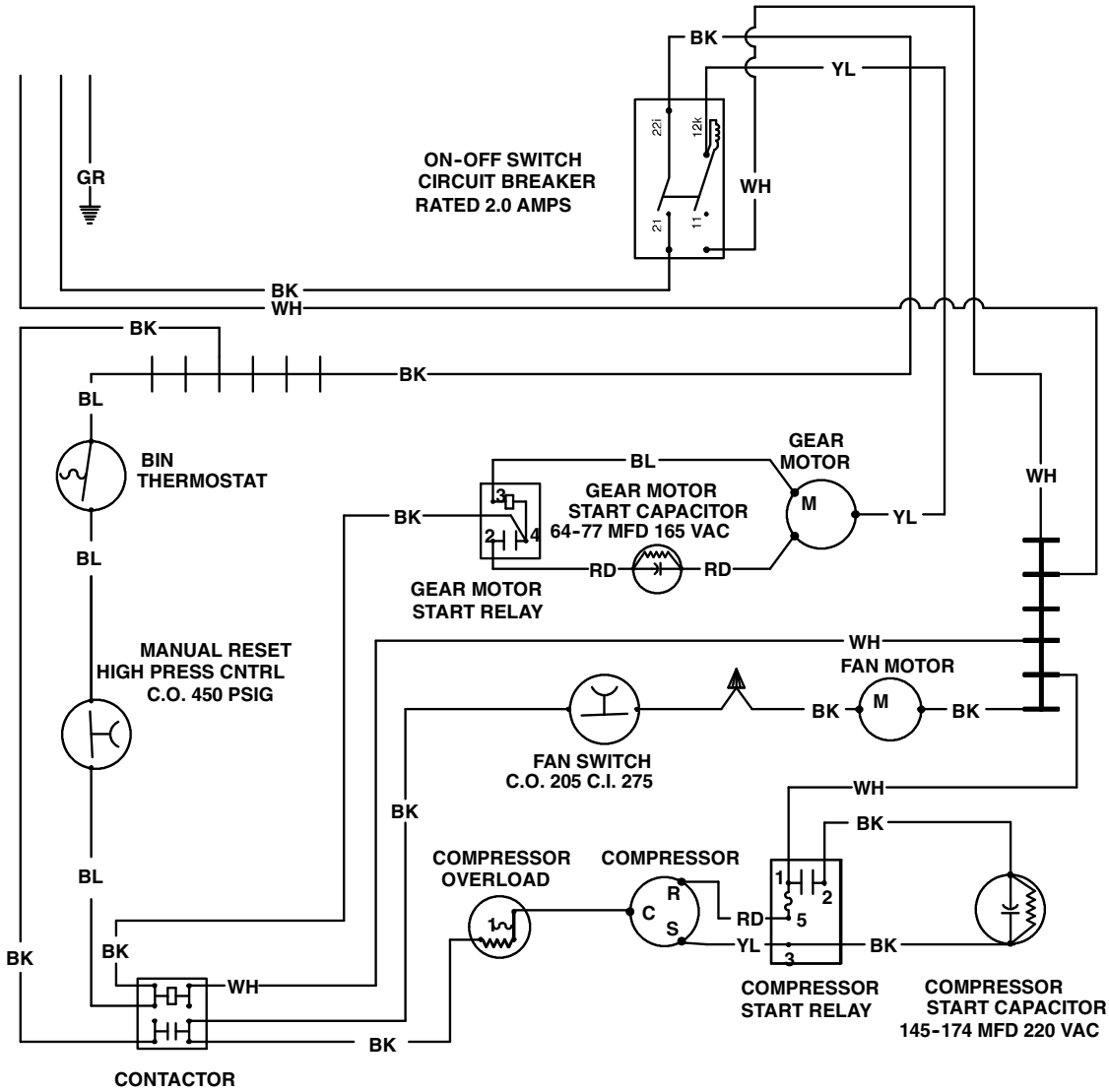

115 VOLTS 60 Hz

AF-200-P-SC-R

Part No. 161909061
Artwork 50922

CORNELIUS INC.

FIGURE 4. WIRING DIAGRAM AF- 200-P–SC–R 115 VOLTS 60 HZ

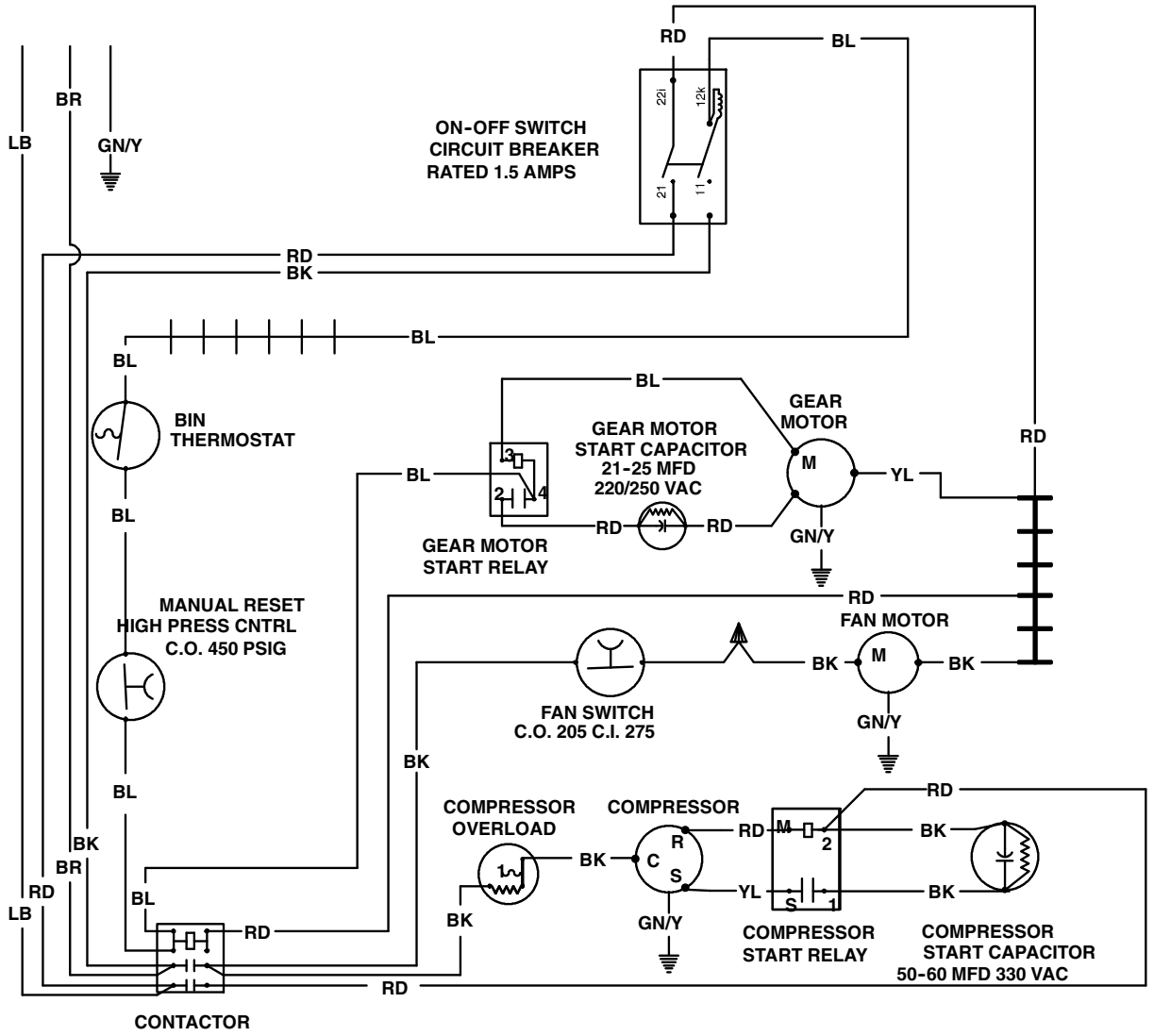

AF-200-P-SC-50-R

220 VOLTS 50 Hz

Part No. 161909064
Artwork 50929

FIGURE 5. WIRING DIAGRAM AF–200–P–SC–50–R 220 VOLTS 50 HZ

 © 2004-2014, Cornelius Inc.

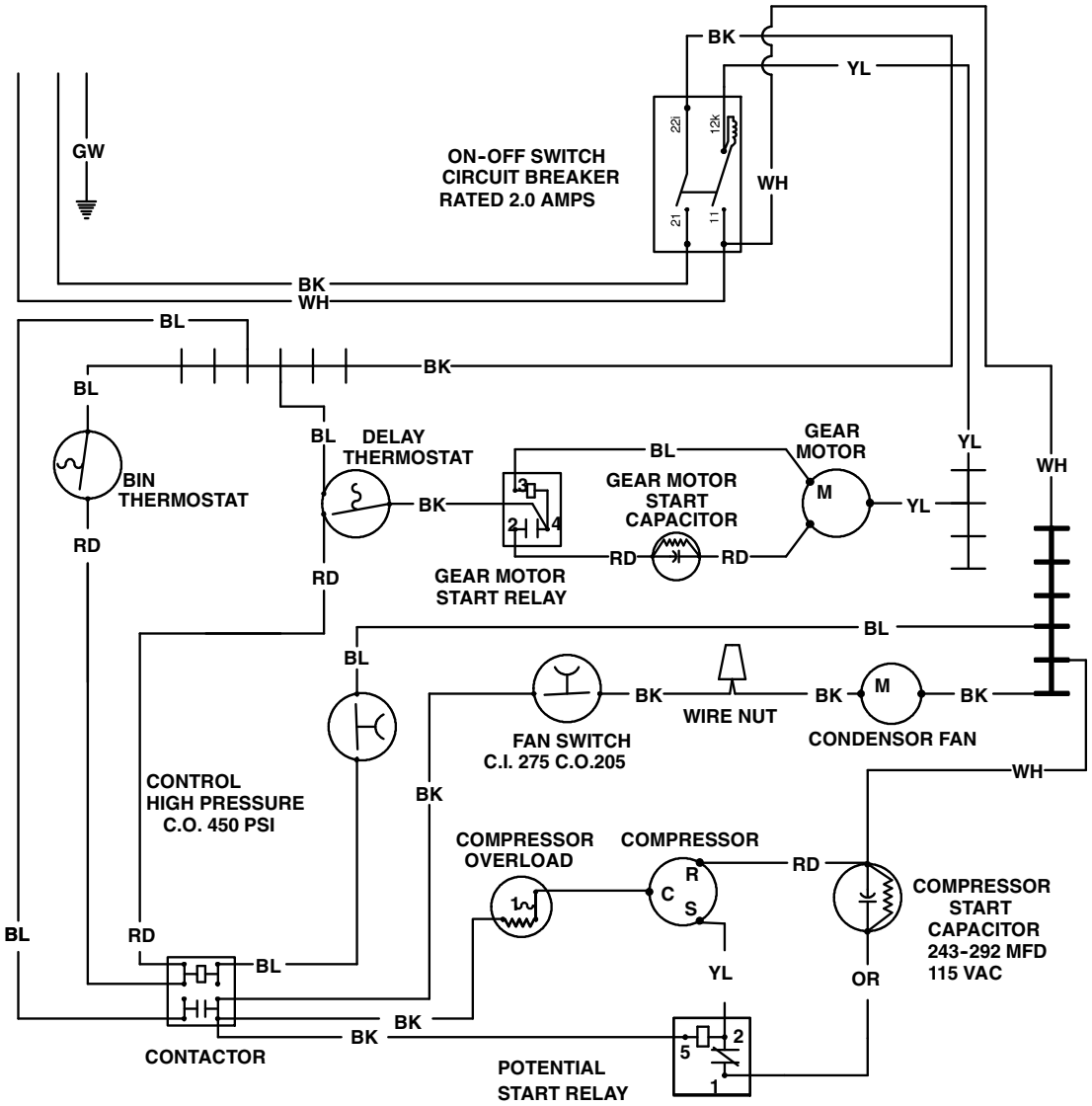

AF525-SC-R

AF725-SC-R

115 VOLTS 60 Hz

Part No. 161909062
Artwork 50923
Rev. B

CORNELIUS INC.

FIGURE 6. WIRING DIAGRAM AF525-SC–R AND AF725–SC–R 115 VOLTS 60 HZ

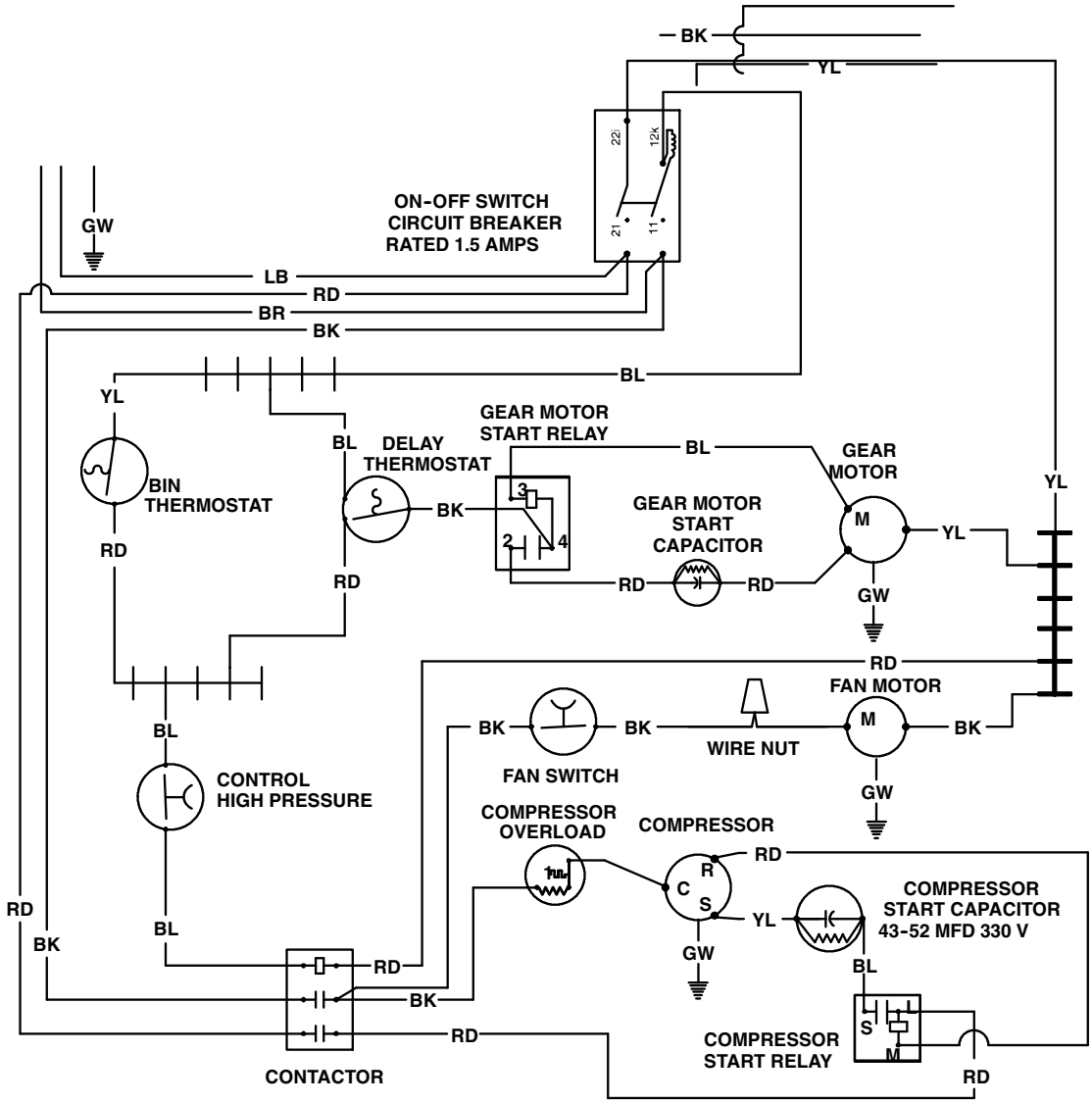

AF/WF-525PSC-50-R **220 VOLTS 50 Hz**

Part No. 161909063
Artwork 50925
Rev. A

CORNELIUS INC.

FIGURE 7. WIRING DIAGRAM AF/WF–525PSC–50–R 220 VOLTS 50 HZ

 © 2004-2014, Cornelius Inc.

TROUBLESHOOTING

Trouble	Probable Cause	Remedy
Unit will not run	A. On-off switch in ”off” position.	A. Turn switch to ”on”.
	B. Defective on-off switch.	B. Check and replace.
	C. Blown fuse.	C. Replace fuse and check for cause of blown fuse.
	D. Thermostat set too warm for ambient.	D. Adjust colder.
	E. Power relay contacts corroded.	E. Check and clean.
	F. Defective thermostat.	F. Check and replace.
	G. Loose electrical connection.	G. Check wiring.
	H. Gearmotor overload protector has cut off machine.	H. Turn switch to off then to on.
Compressor cycles intermittently.	A. Low voltage	A. Check line voltage
	B. Dirty condenser	B. Clean condenser
	C. Air circulation restricted	C. Remove restriction
	D. Defective condenser fan motor	D. Check and replace
	E. Defective relay, overload protector or starting capacitor.	E. Check and replace
	F. Loose electrical connection	F. Check wiring
Making wet ice.	A. Surrounding air temperature too high	A. Correct or move unit
	B. High water level in float reservoir	B. Lower water level
	C. Dirty condenser	C. Clean condenser
	D. Faulty compressor	D. Check and replace*
	E. Refrigerant leak	E. Check and repair
	F. ”O” ring leaking at bottom of evaporator shell	F. Check and replace

***NOTE: Special care must be used with R404a (HP62) charged systems using (POE) Polyolester oil. The refrigeration system must not be open longer than 15 min., and the appropriate drier must be used due to the moisture absorption properties of the POE oil.**

Unit runs but makes no ice.	A. Leak in refrigerant system	A. Check and repair
	B. Moisture in system	B. Check, dehydrate and add drier to system
	C. No water	C. Check water supply

© 2004-2014, Cornelius Inc.

Publication Number: 166240010SER

	D. ”O” ring leaking at bottom of evaporator shell	D. Check and replace ”O” ring
	E. Compressor not running	E. Check and replace ”O” ring
Water leaks.	A. Worn or bad float valve	A. Check and replace
	B. Float and arm assembly stuck	B. Check and replace
	C. ”O” ring leaking at bottom of evaporator shell	C. Check and replace
	D. Storage bin drain and tubing	D. Check and repair
Excessive noise or chattering.	A. Mineral or scale deposits on inside of evaporator shell	A. Remove and clean inside surfaces by immersing evaporator shell in ice machine cleaner
	B. Intermittent water supply	B. Check inlet water line
	C. Water level in float tank too low	C. Check and adjust water level
	D. Auger gearmotor end-play or worn bearings	D. Repair or replace
	E. Air lock in gravity water supply line from float tank to evaporator shell	E. Check and adjust warmer
Machine runs with full bin of ice.	A. Storage bin thermostat set too cold	A. Check and adjust warmer
	B. Bin thermostat thermowell out of path of ice	B. Adjust thermowell
Unit off on reset.	A. Ice jams up in evaporator shell	A. Clean inside surface of evaporator shell
	B. Bin thermostat will not shut-off machine. Set too cold.	B. Check and adjust or replace
	C. Auger motor has worn bearings	C. Check and replace
Unit goes off on reset.	A. Ice chute out of alignment, restricted ice flow out of evaporator section	A. Re-align
	B. Ice chute center separator bent restricting ice flow out of evaporator section	B. Replace ice chute
	C. Incoming water temperature too cold	C. Maintain temperature above 50°F
	D. Bin thermostat does not shut-off when bin is full of ice	D. Replace bin thermostat if necessary
	E. Mineral or scale deposits on inside of evaporator shell and evaporator	E. Inspect and clean
	F. Strips loose or missing on inside of evaporator shell	F. Inspect and replace evaporator shell if necessary

 © 2004-2014, Cornelius Inc.

	G. Low ambient temperature in room where unit is located	G. Maintain temperature above 50°
	H. Gearmotor sticking which causes it to draw excessive amperage (over 2.0 amps)	H. Check amp draw of gearmotor with an amprobe (1.7 amps)
Unit goes off on reset. (cont'd)	I. Plugged expansion valve, causing low back pressure	I. Check back pressure, replace valve, evacuate and re-charge system, replace drier-strainer
	J. Slight leak, causing low back pressure	J. Check back pressure, find gas leak, repair leak, evacuate system, add drier and recharge
	K. Loose hold-down assy	K. Check and tighten or replace
	L. Auger worn excessively on the inside surfaces causing thicker flaked ice to be made	L. Replace auger
	M. Auger out of line causing excessive wear on the lower outside surface where it rubs against evaporator shell liner at the bottom	M. Replace auger and evaporator shell
	N. Broken auger	N. Replace auger
	O. Evaporator surfaces worn or gouged, causing thicker ice to be made	O. Inspect and replace evaporator if necessary
	P. Auger guide bushing worn down	P. Replace auger guide bushing (corkscrew type augers only)
	Q. Loose gearmotor mounting plate	Q. Check and tighten
	R. Low water level in float tank reservoir	R. Adjust float arm to maintain correct water level
	S. Worn thrust washer	S. Replace

© 2004-2014, Cornelius Inc.

Publication Number: 166240010SER

Cornelius Inc.
www.cornelius.com