DECADE POST-MIX DISPENSER

No.	Part No.	Description
1	2530	Line Jumper, Water, 6-Flavor
2	3085	Line Connector, Water, 5-Flavor
	3084	Line Connector, Water 6-Flavor
3	2535	Connector, Water, Straight, 5-Flavor
	2483	Connector, Water, Elbow, 6-Flavor
4	2484	Connector, Tee, Water, 6-Flavor
5	2649	Plug Ass'y
6	311765001	Dual Check Valve Ass'y (Integral)
7	3514	Tube, Plain Water Inlet (Integral)
8	3437	Access Panel
9	3093	Drip Tray, Gray
10	3094	Cup Rest, Gray
11	3320	Switch, Lock
12	3108	Thread Cutting Screw, Phil Rd Hd, No. 10-32 By 1-In. Long
13		Hood (Specify Message)
14	1895	Base
15	1970	Wrap
16	1971	Fitting, Elbow, 1/2-Barb By 1/4-NPT
17	2079	Tank, Water Bath
18	113500000	Drain Tube, Drip Tray, .500I.D. By 60-In. Long
19	174150001	Drain Tube, Water Tank, .625 I.D. By 75-In. Long
20	3298	Thread Cutting Screw, Phil Pan Hd, No. 6-32 By 1/2-In. Long
21	186150000	Machine Screw, Phil Pan Hd, No. 8-32 By 3/8-In. Long
22	3515	Tube, Water Outlet (Integral)
23	178025100	Tapered Gasket, White
24	3915	Cover, Base
25	180025000	O-Ring, .364 I.D. (Syrup Pump)
26	3560	Coil Ass'y, Syrup (Syrup Pump)
	2092	Coil Ass'y, Syrup (W/O Syrup Pump)
	5026	Coil Ass'y, Hi Carb (Greek)
	5032	Coil Ass'y, Hi Carb (Greek)
27	317015000	O-Ring, .239 I.D.
28	319941000	Thread Rolling Screw, Sl Hex Washer Hd, No. 8-32 By 3/8-In. Long
29	2658	Bracket, Pump (Syrup Pump)
30	0012	Thread Rolling Screw, Phil Pan Hd, No. 8-32 By 3-In. Long (Syrup Pump)
31	0073	Pump, Syrup (Syrup Pump)
32	0550	Thread Cutting Screw, Phil Truss Hd, No. 8-16 By 7/16-In. Long (Syrup Pump)
33	3249	Tube, Syrup Outlet (Syrup Pump)
34	319679000	Clamp, Syrup Oulet Tube (Syrup Pump)
35	3216	Manifold Ass'y, CO_2, 5-Flavor (Syrup Pump)
	3222	Manifold Ass'y, CO_2, 6-Flavor (Syrup Pump)
36	3534	Elbow, Syrup (Syrup Pump)
37	3223	Tube Ass'y CO_2 Inlet (Syrup Pump)
38	3574	Coil Basket Ass'y, Integral (Includes 39-41)
	4440	Coil Basket Ass'y, Remote (Includes 41-43)
39	3512	Coil, Plain Water, High Capacity (Integral)
40	2484	Connector, Tee, Plain Water (Integral)
41	3516	Rack, Coil (Integral)
	3715	Rack, Coil (Remote)
42	3842	Coil Ass'y, Water No. 1 (Remote)
43	3629	Coil Ass'y, Water No. 3 (Remote)
44	4126	Coil Ass'y, Water No. 2, 5-Flavor (3-2-1)
	4053	Coil Ass'y, Water No. 2, 6-Flavor (3-2-1)
45	560002655	Carbonator Ass'y (Integral)
	560001274	Carbonator Ass'y (Greek)
	3197	Probe Ass'y (Integral)
46	77068700	Fitting, Tee, 7/16-20 (Syrup Pump)
47	2654	Power Cord, 115V 60HZ
	3036	Power Cord, 230V 60HZ
	4344	Power Cord, 220V 50HZ
	560001326	Power Cord, 220V 50HZ (China)
48	2227	Platform, Pump
49	2229	Insulation, Deck
50	313093000	Button Plug (Remote)
51	2170	Motor, 115V 60HZ (Integral)
	2765	Motor, 230V 50/60HZ (Integral)
52	312996000	Pump, Water, 100-GPH (Integral)
53	187483000	Clamp, Motor to Pump (Integral)
54	187502000	Fitting, Elbow, 3/8-NPT By 7/16-20 (Integral)
55	361003200	Fitting, Elbow, 3/8-NPT By 5/8-18 (Integral)
56	189429000	Hex Nut, 1/4-20 (Integral)
57	4355	Strain Relief, 220V 50HZ
58	4359	Bracket, 220V 50HZ
59	200498003	Hex Nut, No. 8-32, 220V 50HZ
60		SF-1 Block Ass'y (See Manual No. 319006008) LEV Bolck Ass'y (See Manufactures Parts List)
61	318308000	Thread Rolling Screw, Phil Pan Hd, No. 10-32 By 1-In. Long (SF-1)
	560003072	Sheet Metal Screw, Phil Pan Hd, No. 10 By 1-In. Long (LEV)
62		SF-1 Dispensing Valve Ass'y (See Manual No. 319006008) LEV Dispensing Valve Ass'y (See Manufactures Parts List)
63	560003075	Panel, Valve Mount, 5-Flavor
	560003074	Panel, Valve Mount, 6-Flavor
	560003073	Panel, Valve Mount, 4-Flavor
64	2901	Wire Harness, 24V, 5-Flavor
	2546	Wire Harness, 24V, 6-Flavor

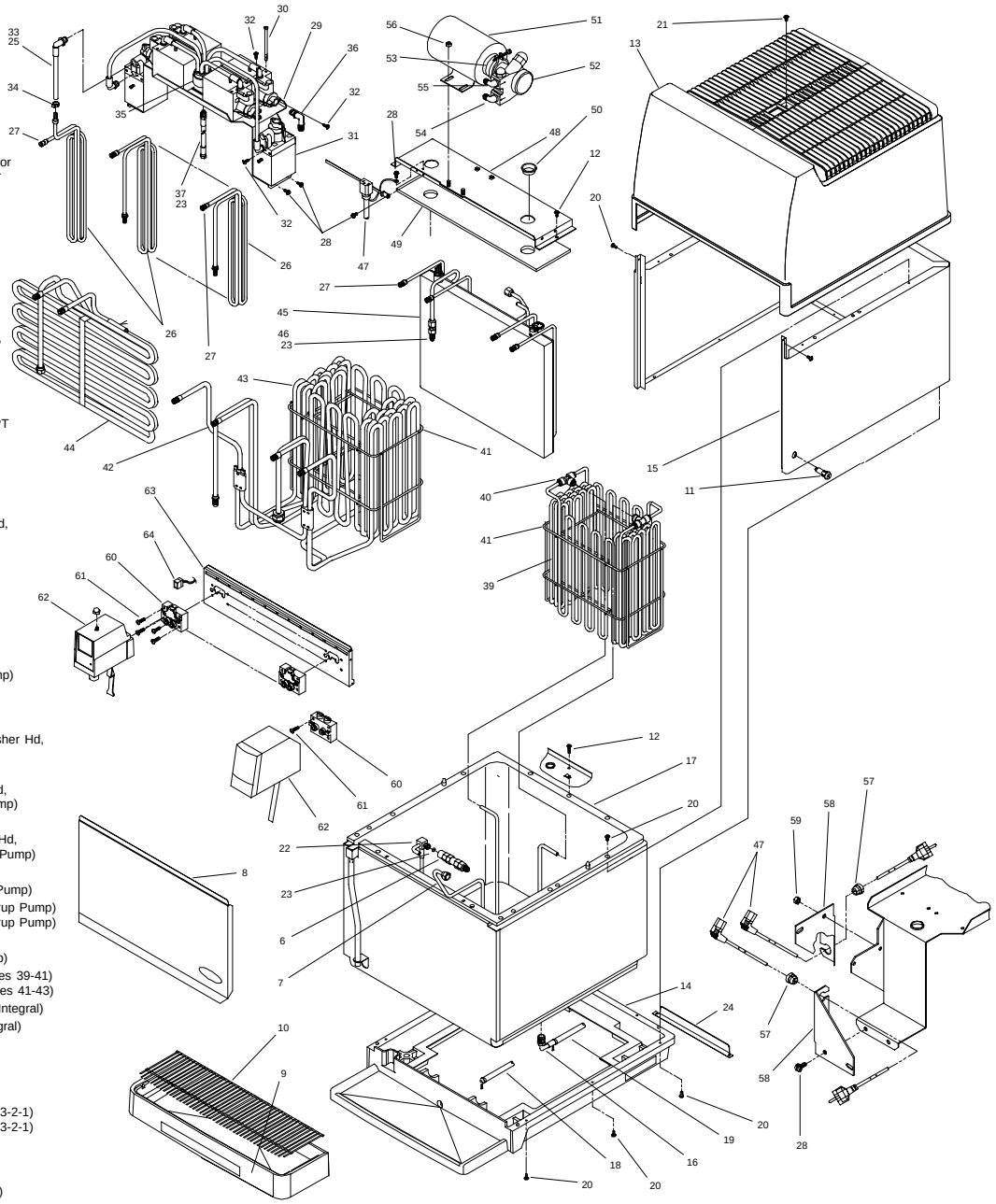

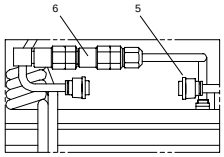

4-FLAVOR INTEGRAL

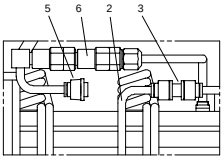

FIVE VALVES CARB NO VALVES NON-CARB

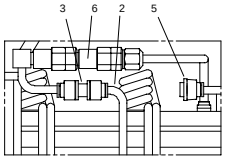

FOUR VALVES CARB ONE VALVE NON-CARB

5-FLAVOR INTEGRAL

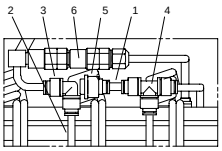

FIVE VALVES CARB ONE VALVE NON-CARB

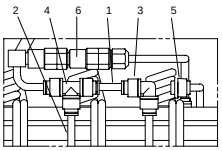

FOUR VALVES CARB TWO VALVES NON-CARB

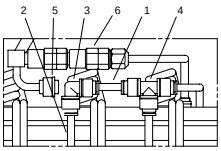

SIX VALVES CARB NO VALVES NON-CARB

6-FLAVOR INTEGRAL

DECADE POST-MIX DISPENSER

No.	Part No.	Description
65	560003261	Platform
66	319941000	Thread Rolling Screw, Sl Hex Washer Hd, No. 8-32 By 3/8-In. Long
67	2859	Transformer, 115V 60HZ
	2880	Transformer, 230V 50HZ
	4377	Transformer, 220V 50HZ
68	3716	Evaporator Ass'y (Includes 69-72)
69	3509	Evaporator Coil, Inside
70	3508	Evaporator Coil, Outside
71	2579	Rod, Evaporator Support
72	2133	Spacer
73	3558	Insulation, Platform
74	0010	Thread Rolling Screw, Phil Pan Hd No. 10-24 By 5/8-In. Long
75	3439	Holder, Probe
76	2598	Probe Ass'y
	560000899	Probe Ass'y, 230V 50HZ
77	313093000	Plug, Cap
78	2630	Retainer, Support Rod
79	2673	Sensor
	560000900	Sensor, 230V 50HZ
80	2757	Wire Clip
81	4556	Handle
82	2232	Shroud, Condenser Coil
83	2233	Bracket, Agitator Motor
84	2782	Condenser Motor, 115V 60HZ
	2783	Condenser Motor, 230V 50/60HZ
85	3911	Fan Blade, Condenser Motor
86	189429000	Hex Nut, 1/4-20
87	2737	J-Nut, No. 8-32
88	2601	Dryer
89	309645000	Switch, Rocker
90	2478	Bushing
91	2206	Condenser
92	0831	Retainer Clip
93	2549	Wire Harness, Refrigeration
	3252	Wire Harness, Refrigeration
94	2599	Power Cord, Refrigeration
	4345	Power Cord, Refrigeration, 230V 50HZ
95	2260	Cover, Control Box
96	2482	Guide
97	360668000	Bushing
98	186570000	Strain Relief
99	2243	Control Board
	4343	Control Board, 230V 50HZ
100	2619	Electrical Box
	4350	Electrical Box, 230V 50HZ
101	200498003	Hex Nut, No. 8-32
102	2792	Capacitor, Run, 115V 60HZ (Integral)
	2793	Capacitor, Run, 220/230V 50/60HZ (Integral)
103	2477	Strap, Capacitor (Integral)
104	3648	Compressor Kit, 1/3HP 115V 60HZ
	3707	Compressor Kit, 1/3HP 230V 60HZ
	3706	Compressor Kit, 1/3HP 240V 50HZ
105	189723000	Grommet, Compressor
106	398034400	Hitch Pin
107	317781000	Bushing
108	4298	Overload, 1/3HP 115V 60HZ
	3142	Overload, 1/3HP 220/240V 50HZ
109	3128	Relay, Start, 1/3HP 115V 60HZ
	3143	Relay, Start, 1/3HP 230V 50HZ
110	187636000	Strap, Bale
111	187637000	Spring, Overload
112	187638000	Cover, Terminal
113	3495	Agitator Motor, 115V 60HZ
	3535	Agitator Motor, 230V 60HZ
	3496	Agitator Motor, 230V 50HZ
114	2228	Bracket, Agitator Motor
115	186154000	Machine Screw, Phil Pan Hd, No. 8-36 By 3/8-In. Long
116	3082	Blade, Agitator Motor
117	186599000	Slinger
118	186294000	Washer, Lock, .262 I.D.
119	186116000	Hex Nut, 1/4-20
120	3521	Fan, Agitator Motor

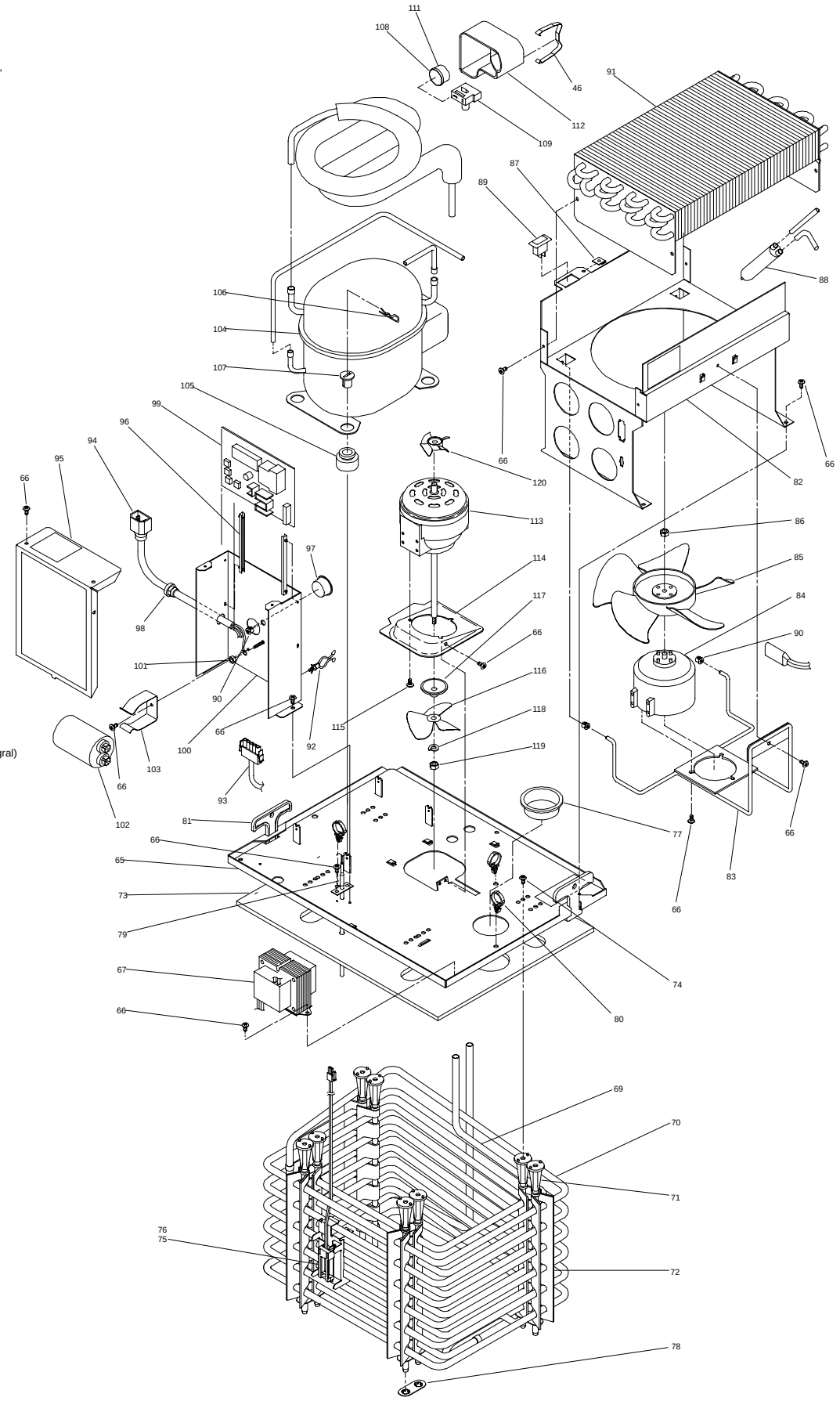

9-28-1998
TP00808