VECTOR TECHNICS

2806 FPV

1300KV

MOTOR SPECIFICATIONS

Kv (Motor Velocity Constant)	1300 RPM/V
Kt (Motor Torque Constant)	0.0087 Nm/A @ 16636 RPM
Maximum Continuous Current*	16A (180s)
Maximum Continuous Power*	392.0 W (180s)
Power Density	4.8 W/g (Rated), 8.2 W/g (Maximum)
Voltage Range	18V - 24V (6S LiPo)
Io (XX@V)	0.7A (24@V)
Inductance per phase (Winding Inductance)	0.0277 (≃0.03) mH
Rph (Wind Resistance per phase)	0.082 (≃0.03) Ω
Stator Poles	12S
Magnetic Poles	14P
Bearings	Dual 685-2z
Stick Out Shaft Diameter	ø 5 mm
Motor Diameter	ø 33 mm
Motor Length	22.4 mm
Motor Weight	50 g ± 2 g
Mount Pattern @ 90 deg	4X M3 @ PCD ø 19 mm ↧ 3.5 mm
Compatible Propeller Size	7 " inch to 8 " inch
Propeller Mount Pattern	M5 ↧ 10 mm

2D CAD

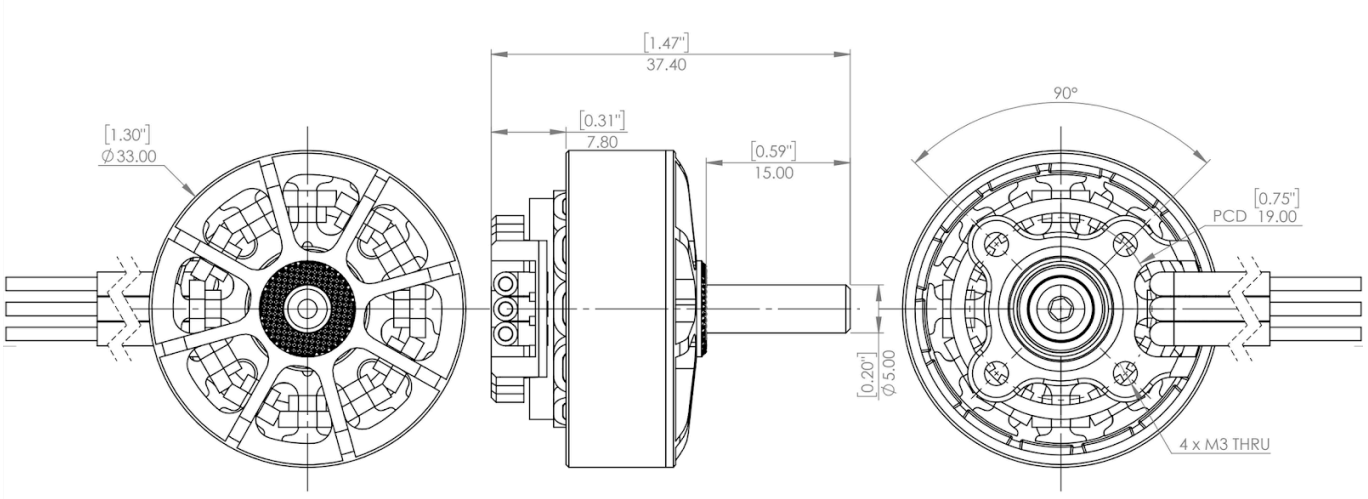

Note: Specifications and drawings may be revised without notice. Vector Technics assumes no liability for reliance on unverified data.
All Dimensions in millimeters (mm)

2806 FPV 1300 KV - TEST DATA

Note: The test data provided below is subject to environmental and testing conditions, including but not limited to temperature, humidity, altitude, and the equipment used. Results may vary depending on specific testing parameters and conditions.

Propeller	Gemfan 70 x 40 TRI- BLADE CFRP_FP						
ESC	HW 40A 6S XRotor			**Power Supply / Battery**	HWB - 22000 mAh 6S		
Test Date:	30-08-2025	**Humidity:**	93 %	**Environmental Temp:**	24° C	**Cross-winds:**	Mild

PWM - Throttle%	Voltage	Current (A)	RPM	Thrust (g)	Torque (N*m)	Electrical Power (W)	Efficiency	Temp (Celcius)
1300 - 30	25	1.9	8316	196	0.03	26.1	4.1	53° C (@70% 10 min Constant)
1400 - 40	24.9	3.7	10517	320	0.05	55.0	3.5	
1500 - 50	24.8	6.4	12529	470	0.07	91.8	3.0	
1600 - 60	24.7	10.4	14674	678	0.1	153.6	2.6	
1700 - 70	24.5	16	16636	901	0.14	243.8	2.3	
1800 - 80	24.3	22.4	18309	1109	0.17	325.8	2.0	59 ° C (Maximum)
1900 - 90	24	29.9	19430	1336	0.2	406.7	1.9	
1950 - 95	24	31.2	19622	1358	0.21	431.3	1.8	
2000 - 100	24	30.9	19637	1362	0.2	411.1	1.8	

Note: Specifications and drawings may be revised without notice. Vector Technics assumes no liability for reliance on unverified data.

Propeller	Gemfan 70 x 40 TRI- BLADE CFRP_FP						
ESC	ZERODRAG 4- IN 1 55A 6S			**Power Supply / Battery**	HWB - 22000 mAh 6S		
Test Date:	07-11-2025	**Humidity:**	53 %	**Environmental Temp:**	24 ° C	**Cross-winds:**	Mild

PWM - Throttle%	Voltage	Current (A)	RPM	Thrust (g)	Torque (N*m)	Electrical Power (W)	Efficiency	Temp (Celcius)
1300 - 30	24.9	1.9	7352	238	0	48.5	4.9	75 ° C (@70% 10 min Constant)
1400 - 40	24.8	3.9	9315	398	0.1	97.6	4.1	
1500 - 50	24.7	6.8	11102	585	0.1	169.4	3.5	
1600 - 60	24.6	10.8	12843	779	0.1	265.7	2.9	
1700 - 70	24.4	15.4	14109	959	0.1	375.5	2.6	
1800 - 80	24.3	20.5	15357	1132	0.2	498.0	2.3	80 ° C (Maximum)
1900 - 90	24.1	26.6	16393	1307	0.2	639.5	2.0	
1950 - 95	23.9	29.9	16899	1396	0.2	716.7	1.9	
2000 - 100	23.8	33.3	17304	1465	0.2	794.2	1.8	

Note: Specifications and drawings may be revised without notice. Vector Technics assumes no liability for reliance on unverified data.

Propeller	Gemfan 70 x 40 TRI- BLADE CFRP_FP						
ESC	HW 40A 6S XRotor			**Power Supply / Battery**	GenX - 5200 mAh 4S		
Test Date:	13-11-2025	**Humidity:**	31 %	**Environmental Temp:**	25 ° C	**Cross-winds:**	Mild

PWM - Throttle%	Voltage	Current (A)	RPM	Thrust (g)	Torque (N*m)	Electrical Power (W)	Efficiency	Temp (Celcius)
1300 - 30	16.54	1.77	6839	130	0.021	29.3	4.4	60 ° C (@70% 10 min Constant)
1400 - 40	16.47	2.8	8150	194	0.03	46.1	4.2	
1500 - 50	16.4	3.98	9277	262	0.04	65.3	4.0	
1600 - 60	16.31	5.8	10609	353	0.052	94.6	3.7	
1700 - 70	16.18	8.14	11927	455	0.067	131.7	3.5	
1800 - 80	16.01	11.08	13250	568	0.084	177.4	3.2	65 ° C (Maximum)
1900 - 90	15.83	14.82	14502	699	0.103	234.6	3.0	
1950 - 95	15.74	16.76	15090	758	0.112	263.8	2.8	
2000 - 100	15.68	18.07	15455	797	0.117	283.3	2.8	

Note: Specifications and drawings may be revised without notice. Vector Technics assumes no liability for reliance on unverified data.

2806 FPV 1300 KV - TEST DATA

Note: The test data provided below is subject to environmental and testing conditions, including but not limited to temperature, humidity, altitude, and the equipment used. Results may vary depending on specific testing parameters and conditions.

Propeller	Gemfan 80 x 40 TRI- BLADE CFRP_FP						
ESC	HW 40A 6S			**Power Supply / Battery**	GenX - 5200 mAh 4S		
Test Date:	11-11-2025	**Humidity:**	31 %	**Environmental Temp:**	25 ° C	**Cross-winds:**	Mild

PWM - Throttle%	Voltage	Current (A)	RPM	Thrust (g)	Torque (N*m)	Electrical Power (W)	Efficiency	Temp (Celcius)
1300 - 30	16.52	1.93	5364	177	0.03	31.9	5.6	75 ° C (@70% 10 min Constant)
1400 - 40	16.42	3.66	6735	314	0.049	60.1	5.2	
1500 - 50	16.28	6.32	8133	463	0.075	102.9	4.5	
1600 - 60	16.1	9.39	9321	586	0.097	151.2	3.9	
1700 - 70	15.89	13.04	10311	740	0.121	207.2	3.6	
1800 - 80	15.66	17.34	11240	869	0.145	271.5	3.2	80 ° C (Maximum)
1900 - 90	15.4	22.3	12051	1007	0.169	343.4	2.9	
1950 - 95	15.27	25.06	12499	1078	0.181	382.7	2.8	
2000 - 100	15.19	26.68	12719	1120	0.188	405.2	2.7	

Note: Specifications and drawings may be revised without notice. Vector Technics assumes no liability for reliance on unverified data.