Lantech

T(P)GS-0208T

10 10/100/1000T Unmanaged (PoE at/af) Ethernet Switch

T(P)ES-0208T

2 10/100/1000T + 8 10/100TX Unmanaged (PoE at/af) Ethernet Switch

User Manual



V1.05

FEB. 2026

RP-001-31

Notice

The PoE Ethernet switch is equipped with P.S.E capacity. It is designed for data communication within vehicles, to facilitate data transfer and Ethernet connectivity as well as expandability. It's important to note that these features have no impact on the safety of driving and passenger well-being and the device does not possess any immunity-related functionalities.

Approval Information

Version 1.05	Name	Title	Date
Author	Greg Tsai	Marketing	2026.02.06
Verifier	Jacky Chou	HW QA	2026.02.06
Approver	Thomas Lee	RD head	2026.02.06

Version	Date	Content of Modification	Author(s)
V1.00	2023.10.31		Greg Tsai
V1.01	2024.02.29	Update the spec of PoE budget.	Greg Tsai
V1.02	2024.09.03	Remove the EN5015 isolation warning. (This model is PoE & Ethernet isolation)	Greg Tsai
V1.03	2024.11.19	Update on PoE Budget Usage Guidelines	Greg Tsai
V1.04	2025.10.28	Added unit conversion to torque guideline: 14 kgf·cm ≈ 1.4 N·m.	Alice Huang
V1.05	2026.02.06	Add bypass section	Greg Tsai

Recommendation for Shielded network cables

STP cables have additional shielding material that is used to reduce external interference. The shield also reduces the emission at any point in the path of the cable. Our recommendation is to deploy an STP network cable in demanding electrical environments. Examples of demanding indoor environments are where the network cable is located in parallel with electrical mains supply cables or where large inductive loads such as motors or contactors are in close vicinity to the camera or its cable. It is also mandatory to use an STP cable where the power device (like IP camera) is used outdoors or where the network cable is routed outdoors.



Important Notice

Lantech Communications Global, Inc. reserves the right to modify the equipment, its specification or this manual without prior notice, in the interest of improving performance, reliability, or servicing. At the time of publication all data is correct for the operation of the equipment at the voltage and/or temperature referred to. Performance *d*ata indicates typical values related to the particular product.

No part of this documentation or information supplied may be divulged to any third party without the express written consent of Lantech Communications Global Inc. Products offered may contain software which is proprietary to Lantech Communications Global Inc. The offer or supply of these products and services does not include or infer any transfer of ownership.

Interference Issues

This Equipment has been tested and found to comply with the limits for a Class A digital device, pursuant to Part 15 of the FCC rules. These limits are designed to provide reasonable protection against harmful interference in a commercial or industrial installation. This equipment generates, uses, and can radiate radio frequency energy. It may cause harmful interference to radio communications if the equipment is not installed and used in accordance with the instructions.

FCC Warning

This Equipment has been tested and found to comply with the limits for a Class-A digital device, pursuant to Part 15 of the FCC rules. These limits are designed to provide reasonable protection against harmful interference in a residential installation. This equipment generates, uses, and can radiate radio frequency energy. It may cause harmful interference to radio communications if the equipment is not installed and used in accordance with the instructions. However, there is no guarantee that interference will not occur in a particular installation. If this equipment does cause harmful interference to radio or television reception, which can be determined by turning the equipment off and on, the user is encouraged to try to correct the interference by one or more of the following measures:

- Reorient or relocate the receiving antenna.
- Increase the separation between the equipment and receiver.
- Connect the equipment into an outlet on a circuit different from that to which the receiver is connected.
- Consult the dealer or an experienced radio/TV technician for help.

CE Mark Warning

This is a Class-A product. In a domestic environment this product may cause radio interference in which case the user may be required to take adequate measures.

Content

Chapter 1 Introduction..... 6

Chapter 2 Hardware Description 7

2.1 Physical Dimension..... 7

2.2 Package Content:..... 8

2.3 IP Protection..... 9

2.4 LED Indicators..... 12

2.5 Bypass design..... 12

Chapter 3 Hardware Installation 14

Chapter 1 Introduction

Lantech T(P)GS-0208T is a 10 10/100/1000T (w/8 or 6 PoE at/af) with M12-connctor unmanaged industrial switches for IP54 rated protection. T(P)ES-0208T is a 2 10/100/1000T + 8 10/100TX (w/8 PoE at/af) with M12-connctor unmanaged industrial switches for IP54 rated protection, which meet the high reliability requirements demanded by industrial applications.

For latest product specifications, please refer to Lantech official site.

Chapter 2 Hardware Description

In this paragraph, it will describe the Industrial switch's hardware spec, port, cabling information, and wiring installation.

2.1 Physical Dimension

T(P)GS-0208T

Aluminum case. IP-54, 182mm(W)x179.5mm(H)x76.5mm(D)

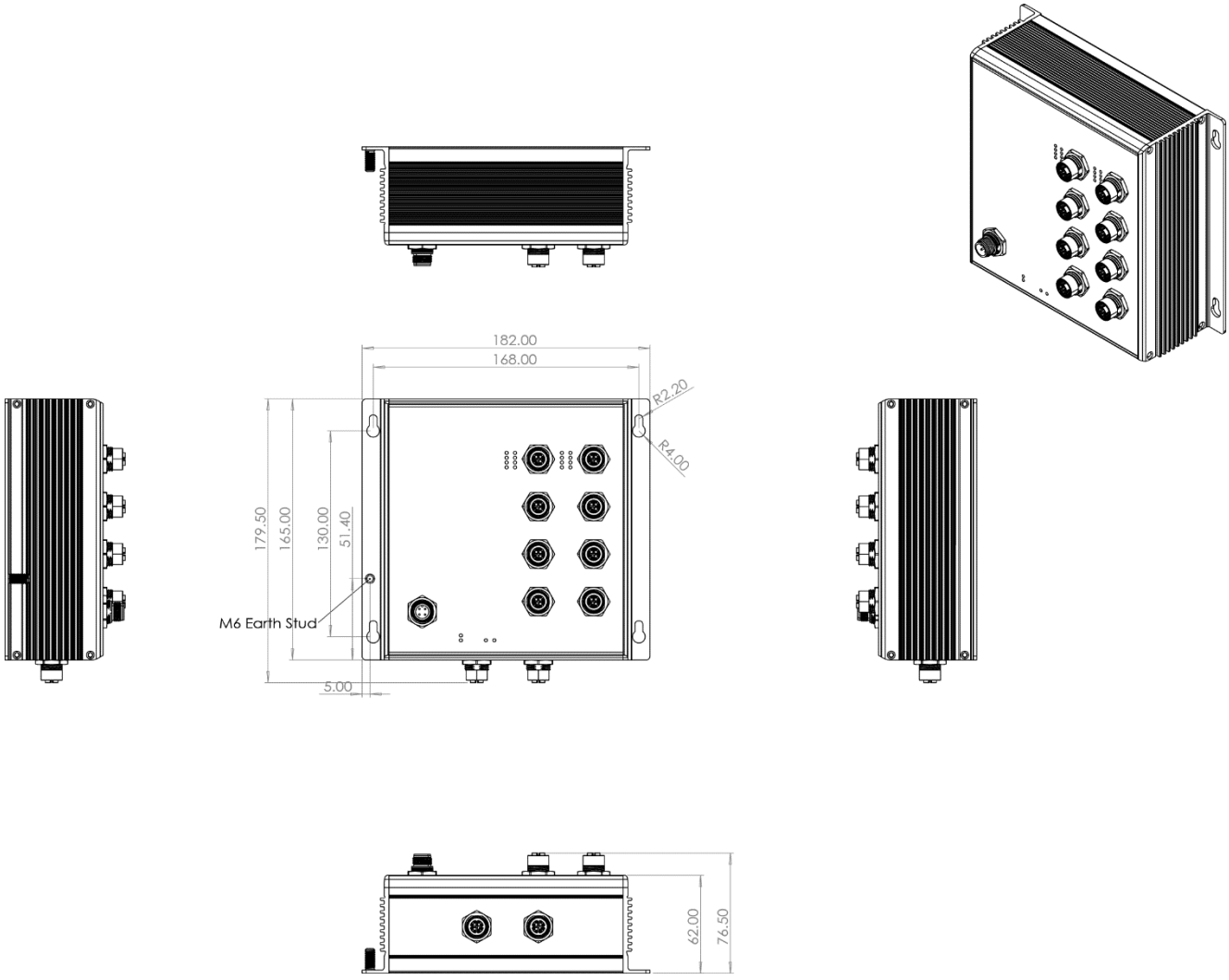

T(P)ES-0208T

Aluminum case. IP-54, 182mm(W)x179.5mm(H)x76.5mm(D)

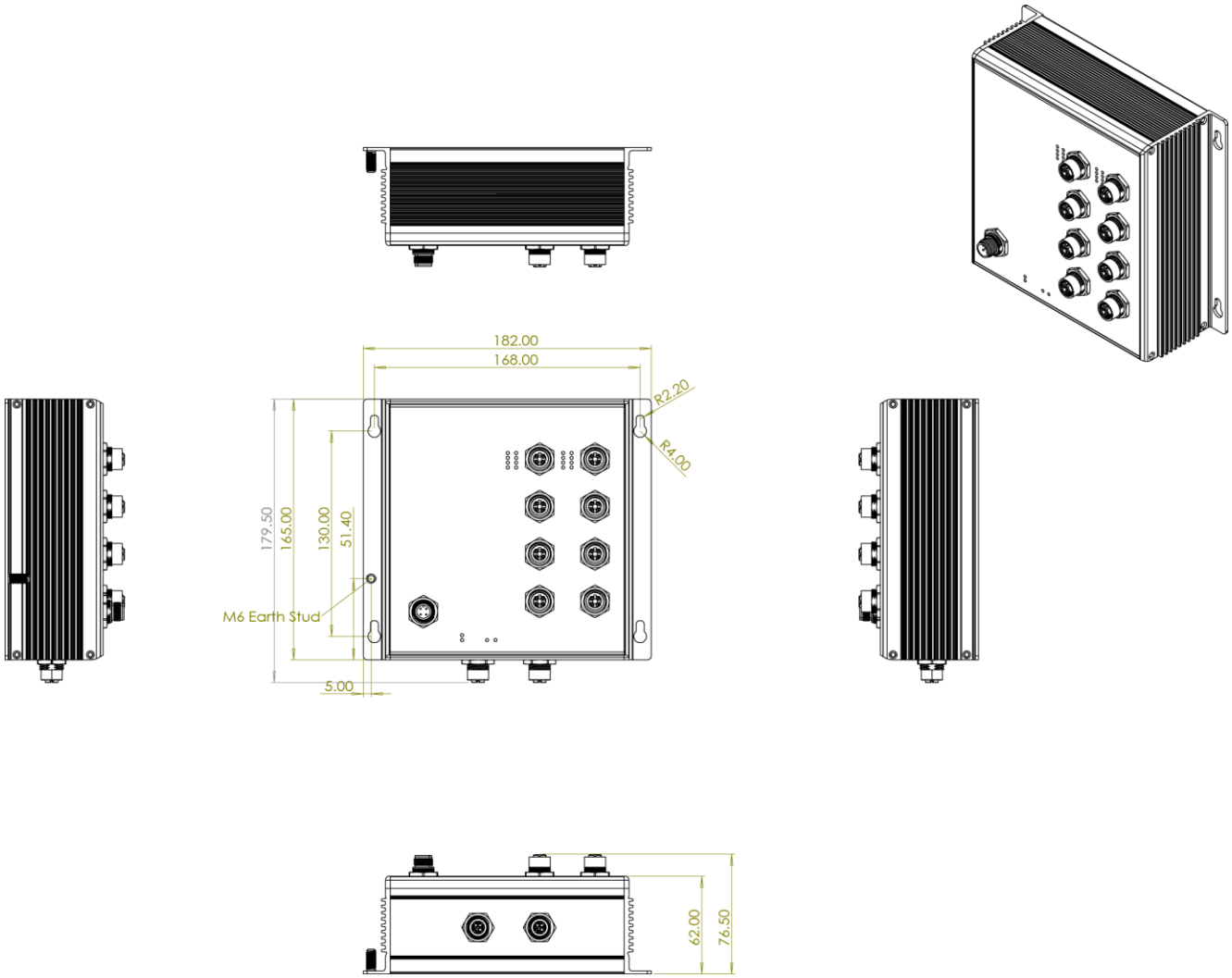

2.2 Package Content:

- Ethernet Switch
- Manual CD*

*By request

2.3 IP Protection

The **IP Code**, **Ingress Protection Rating**, sometimes also interpreted as **International Protection Rating**, classifies and rates the degree of protection provided against the intrusion (including body parts such as hands and fingers), dust, accidental contact, and water in *mechanical casings* and with electrical enclosures. It is published by the International Electrotechnical Commission (IEC)

Solid particle protection

The first digit indicates the level of protection that the enclosure provides against access to hazardous parts (e.g., electrical conductors, moving parts) and the ingress of solid foreign objects.

Level	Object size protected against	Effective against
0	—	No protection against contact and ingress of objects
1	>50 mm	Any large surface of the body, such as the back of a hand, but no protection against deliberate contact with a body part
2	>12.5 mm	Fingers or similar objects
3	>2.5 mm	Tools, thick wires, etc.
4	>1 mm	Most wires, screws, etc.
5	Dust protected	Ingress of dust is not entirely prevented, but it must not enter in sufficient quantity to interfere with the satisfactory operation of the equipment; complete protection against contact
6	Dust tight	No ingress of dust; complete protection against contact

Liquid ingress protection

The second digit indicates the level of protection that the enclosure provides against harmful ingress of water.

Level	Protected against	Testing for	Details
0	Not protected	—	—
1	Dripping water	Dripping water (vertically falling drops) shall have no harmful effect.	Test duration: 10 minutes Water equivalent to 1 mm rainfall per minute
2	Dripping water when tilted up to 15°	Vertically dripping water shall have no harmful effect when the enclosure is tilted at an angle up to 15° from its normal position.	Test duration: 10 minutes Water equivalent to 3 mm rainfall per minute
3	Spraying water	Water falling as a spray at any angle up to 60° from the vertical shall have no harmful effect.	Test duration: 5 minutes Water volume: 0.7 litres per minute Pressure: 80–100 kPa
4	Splashing of water	Water splashing against the enclosure from any direction shall have no harmful effect.	Test duration: 5 minutes Water volume: 10 litres per minute Pressure: 80–100 kPa
5	Water jets	Water projected by a nozzle (6.3 mm) against enclosure from any direction shall have no harmful effects.	Test duration: at least 15 minutes Water volume: 12.5 litres per minute Pressure: 30 kPa at distance of 3 m

6	Powerful water jets	Water projected in powerful jets (12.5 mm nozzle) against the enclosure from any direction shall have no harmful effects.	Test duration: at least 3 minutes Water volume: 100 litres per minute Pressure: 100 kPa at distance of 3 m
7	Immersion up to 1 m	Ingress of water in harmful quantity shall not be possible when the enclosure is immersed in water under defined conditions of pressure and time (up to 1 m of submersion).	Test duration: 30 minutes Immersion at depth of at least 1 m measured at bottom of device, and at least 15 cm measured at top of device
8	Immersion beyond 1 m	The equipment is suitable for continuous immersion in water under conditions which shall be specified by the manufacturer. Normally, this will mean that the equipment is hermetically sealed. However, with certain types of equipment, it can mean that water can enter but only in such a manner that it produces no harmful effects.	Test duration: continuous immersion in water Depth specified by manufacturer
9	Powerful high temperature water jets	Protected against close-range high pressure, high temperature spray downs.	—

2.4 LED Indicators

The diagnostic LEDs that provide real-time information of system and optional status are located on the front panel of the industrial switch. The following table provides the description of the LED status and their meanings for the switch.

LED	Color	Status	Meaning
PWR1	Green	On	Power 1 is active
		Off	Power 1 is inactive
PWR2	Green	On	Power 2 is active
		Off	Power 2 is inactive
P1 ~ P10	LNK/ACT	On	A network device is detected.
		Blinking	The port is transmitting or receiving packets from the TX device.
		Off	No device attached
PoE (PoE model)		On	The port is operating in PoE mode.
		Off	The port is not operating in PoE mode.

2.5 Bypass design

(Available on -BT/-BBT models; Maximum copper uplink by-pass port distance is 50m)

The bypass module is like an alarm relay but it has default position – close. When system finish booting procedures, CPU will ask bypass module change position from close to open and keep in open status. That's why when switch loss the power, bypass module will be active, because CPU has no ability to ask bypass module keep in open status then bypass will be restored to default position – close.

There is another condition will trigger bypass module -- CPU hang. When CPU is hang, it also loss ability to ask bypass module keep in open status. But at this time, watch dog chipset will force to reset CPU then system will reboot. The CPU will back to normal

status after rebooting then ask bypass module to keep in open status.

Bypass mechanism in open status

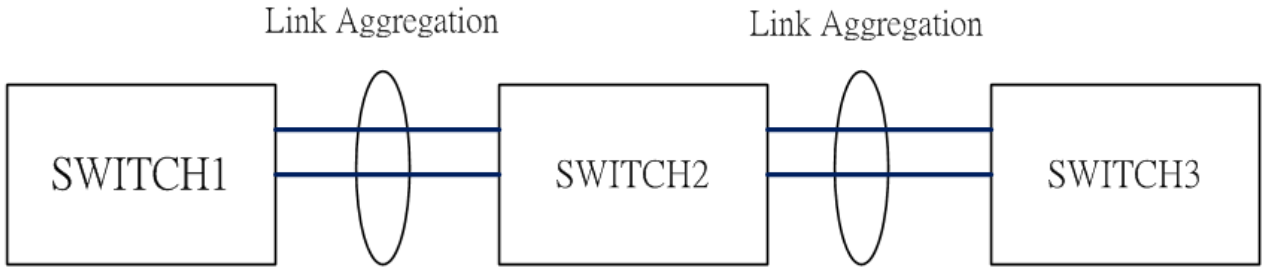

Bypass mechanism in close status

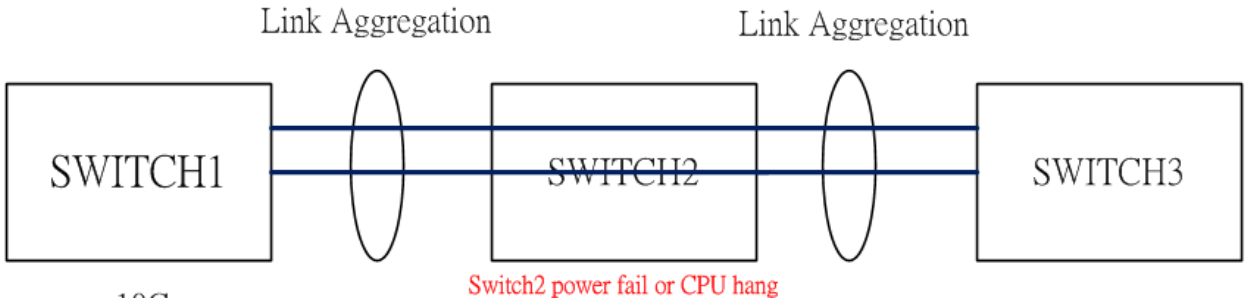

Chapter 3 Hardware Installation

Alert! PoE Budget for Unmanaged POE Switch Model

Each PoE switch model has its own PoE budget limit, which will supply PoE power according to the port sequence and devices' PoE classification. On an unmanaged PoE switch, power distribution is based on the device's class level, determined through a handshaking process per port. The switch will deduct the used budget for each connected device, leaving the remaining budget for subsequent devices based on their class negotiation, rather than distributing a fixed 15W per port.

To avoid issues, calculate the PoE consumption of all connected devices beforehand. If the total PoE requirement exceeds the budget, the switch may shut down and attempt to reboot. If the PoE demand remains over budget after rebooting, the switch will continue to experience power failures.

3.1Hardware installation

3.1.1Unpack switch and check the accessory with packing content list

3.1.2 Mount the switch on desired position. For the best ventilation, it is suggested to mount the switch on metallic surface.

3.1.3 Connect the M12 connector of power input. The power supply for the series is connected via a 4-pole M12 male connector.

■ Voltage of Power Input & PoE budget

Model	Power input
WVI models	Dual 16.8~137.5VDC
24VI models	Dual 9~36VDC
24TVI models	Dual 16.8~56VDC

80W @ 24VDC and above

Please make sure that the external power supply unit you use to provide the PoE voltage meet the following criteria:

- The output voltage of power supply must exceed 48VDC for 802.3af and 53VDC for 802.3at operation.

- The power consumption can satisfy the total power request from all PD devices required.

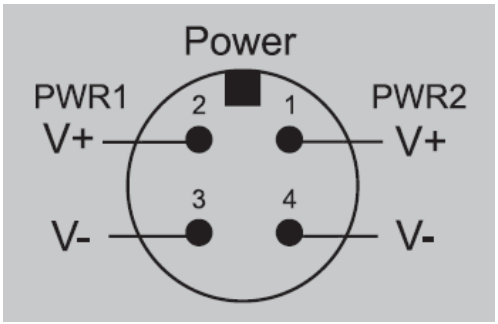

Pin assignment of Power input

■ Redundant Power Input

The power input can be supported redundantly. The supply voltage is electrically isolated from the housing.

Note: With single power supply of the mains voltage, the device will report a power failure. You can disable this power fail event via web browser.

3.1.4 Fitting the device, grounding

Install the system in a dry and clean area to protect the switch to get exposed with dirt.

Plug the connector to the power supply plug then turn on the power supply.

■ Ground

The chassis is grounded via a separate grounding nut (M6).

Use toothed locking washers for a good electrical connection.

*** Note: The torque should not exceed 14 kilogram-force centimeters (kgf·cm), which is approximately 1.4 newton-meters (N·m). Applying torque beyond this limit may cause damage to the grounding components.**



Ground screw of the switch

3.1.5 Connect the M12 connector with RJ-45 data cable, ports are not used shall be caped that comes with the package to insulate the surrounding.

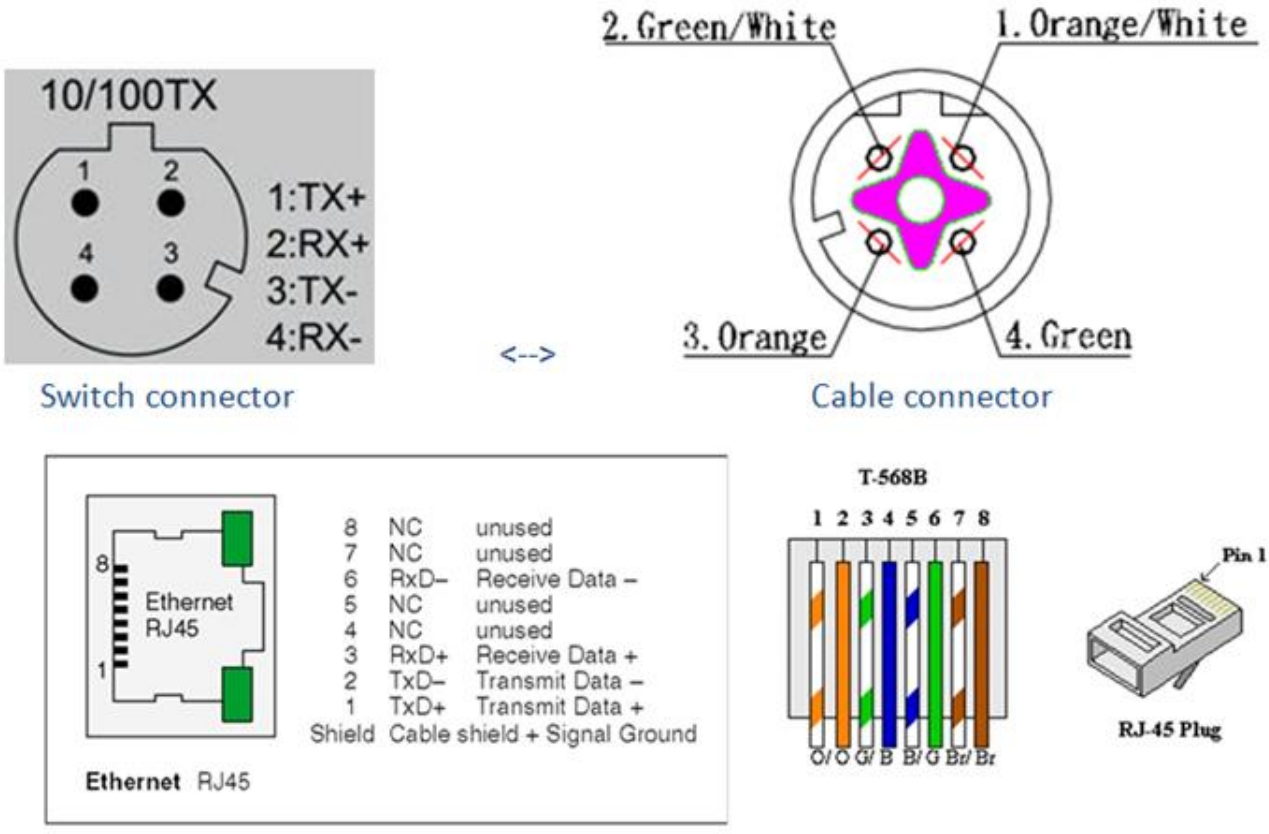

Pin assignment of M12 10/100Tx network connector

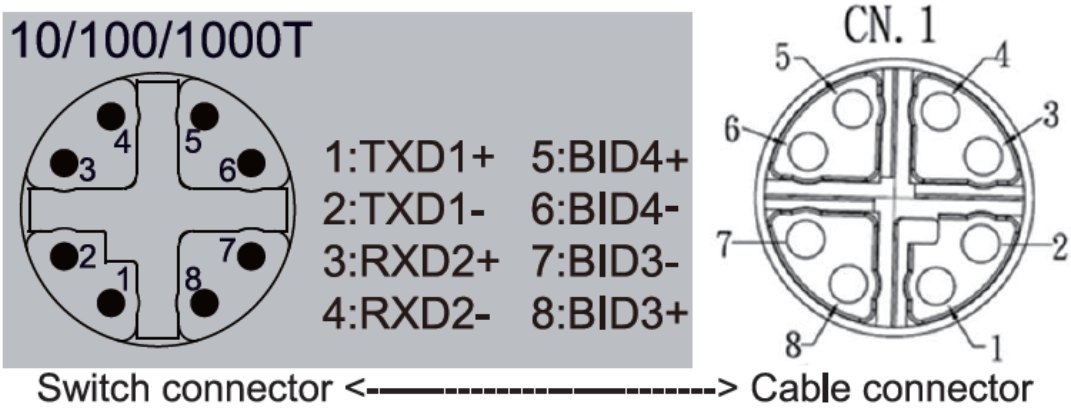

Shell	Gnd	Shell	
1	Orange/ White	1	TWIST
2	Orange	2	
3	Green/ White	3	TWIST
4	Green	6	
5	Brown/ White	7	TWIST
6	Brown	8	
7	Blue/ White	5	TWIST
8	Blue	4	
CN. 1	Wire Color	CN. 2	
PIN OUT			

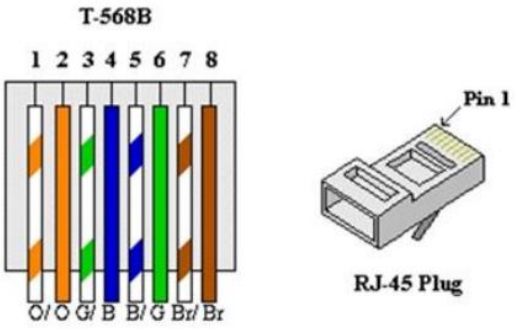

Pin assignment of M12 10/100/100T network connector

3.1.6 Check the status of LED, make sure the switch was in working status.

Note:

- The protection class IP54 is only achieved when bolted together.
- The other components attaching to the system have to meet with the IP54 protection class in order to reach the whole system IP54 protection.
- Empty ports must be sealed with the protective caps supplied.

==========Notice==========

For web-based management, please refer to our “Software Management Manual”. Please contact us for more information.