FlushSash

traditional styling modern performance

Contents

p.02 Heritage FlushSash windows

p.04 Contemporary FlushSash windows

p.06 Choose your frame

p.08 Choose your colour and woodgrain

p.10 Choose your hardware

p.12 Features and benefits

Introduction

Introducing FlushSash, the perfect uPVC solution for homeowners who wish to retain their home's beautiful period styling combined with the benefits of cutting-edge, modern hardware and materials.

FlushSash windows mimic the look of traditional timber frames, offering classic, understated style. Thanks to their authentic aesthetics, they have even been specified in controlled conservation areas. FlushSash can be tailored to virtually any home, whether it be heritage and elegant or cool and contemporary; a range of colour and woodgrain options, and a suite of specially selected hardware allows you to truly personalise your windows to your style.

Contact your installer today advice on tailoring your new FlushSash windows to your home.

> HOWEVER TRADITIONAL THIS WINDOW MAY LOOK, IT OFFERS DECEPTIVELY MODERN PERFORMANCE.

02

History & Heritage

...without the hassle

The FlushSash system is crafted from modern, weatherproof uPVC, which - unlike traditional timber windows - will never need sanding or repainting and will never rot, split or swell.

FlushSash can be specified in bespoke sizes to suit the windows of your home, whether it's a tall townhouse or a quaint and cosy cottage. Georgian bar detailing can also be fitted within your windows to give the 'lattice' effect often found in historic homes.

Heritage houses can often be associated with damp and draughty living conditions due to ill-fitting windows, or ineffective single glazing. Choosing FlushSash for your home can solve these problems and more.

Energy-efficient, high-spec uPVC frames and double or triple glazing will keep your home significantly warmer and could dramatically lower your heating bills. These features also prevent condensation forming and will significantly reduce unwanted outdoor noise.

Elegantly authentic style

Reminiscent of early 19th Century timber windows, FlushSash windows are ideal for heritage homes, particularly in conservation areas where authentic looks are all-important.

Unlike chamfered and sculptured styles which are designed to add contour and detail to your windows, FlushSash windows sit flush within the frame and offer traditional, understated elegance.

However traditional this window may look, it offers deceptively modern performance. Your home will be a haven of warmth and quiet, thanks to the thermal and acoustic insulation of the FlushSash. It has a five-chamber internal construction for increased energy efficiency.

If you live in a conservation area and need or want to replicate traditional timber windows, discuss your project with our team for advice on conservation areas and FlushSash windows to suit your planning requirements.

> FLUSHSASH WINDOWS ARE ALSO IDEAL FOR CONTEMPORARY HOMES WITH MINIMALISTIC STYLING AND DECOR.

04

Cool and *Contemporary*

...versatile as it is beautiful

With clean cut lines, simplistic design and a flush fitting, FlushSash windows are also ideal for contemporary homes with minimalistic styling and décor. A beautiful range of modern smooth colour options have been developed with new homes in mind to mirror the sharp aesthetics of aluminium with all the benefits of uPVC.

FlushSash is versatile as it is beautiful and a choice of configurations, colour choices and hardware options allows your FlushSash windows to be tailored perfectly to the masonry and architectural style of your home.

These low-maintenance windows will keep your home looking its best for years to come, with no more work than an occasional wipe with a damp cloth.

The sleek slim sightlines and concealed mullion option on the FlushSash French Window allows unhindered views of the great outdoors. **With 20% less frame there's more room for glass allowing light to flood into your home.**

06

It's all in the *detail*

Mechanically jointed FlushSash

Mirror traditional timber joints by choosing mechanically jointed FlushSash windows to replicate the aesthetics of a heritage window – perfect for conservation areas.

07

Soften the internal detail of your FlushSash with a sculptured finish.

Fully welded FlushSash

For a modern look, choose fully welded FlushSash windows for joints diagonal in appearance. Mitre joints are a distinctive characteristic of uPVC allowing clean-cut lines and excellent performance.

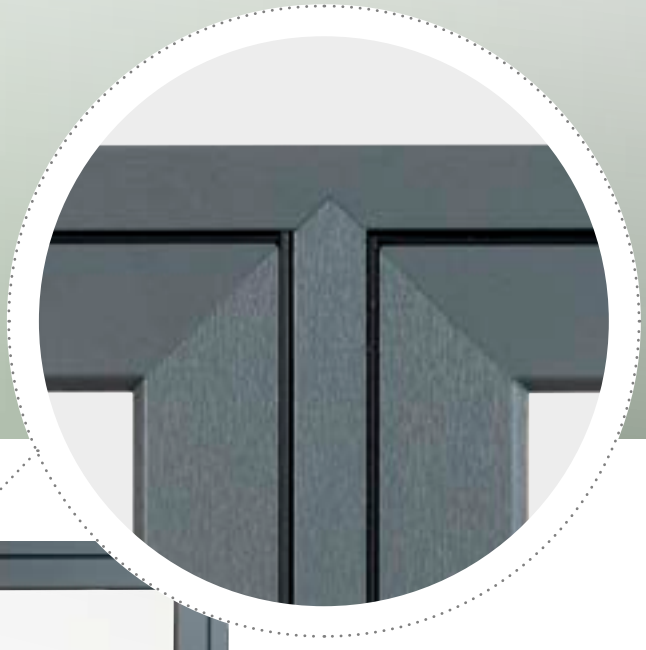

> YOU CAN CHOOSE DIFFERENT FINISHES FOR THE INSIDE AND OUTSIDE OF YOUR PROPERTY.

08

Let your home be as *individual* as you are

A range of smooth colour and textured woodgrain options have been carefully selected to perfectly suit a range of properties whether your home be a contemporary new build, Georgian townhouse or quaint cottage in the countryside.

Each woodgrain has been designed to look just like traditional stained or painted timber and will require little or no maintenance other than an occasional wipe with a damp cloth. A range of smooth colour options provide a contemporary feel ideal for the modern home.

You can also choose different finishes for the inside and outside of your property.

For example, you might choose a warm timber effect for the outside, such as Irish Oak, and opt for clean, bright White for the interior. You might even decide to specify a particular colour to match your kitchen - just speak to your installer about all the possible options.

ick a colour

Contact your installer to request a swatch book including the full range of colour and woodgrain options.

White	Slate Grey	Silver Grey	Rosewood
Irish Oak	Golden Oak	Cream	Chartwell Green
Beck Brown	Anthracite Grey		

> WITH FLUSHSASH HARDWARE, THERE IS NO NEED TO CHOOSE BETWEEN STYLE AND FUNCTION.

Hardware

Heritage

You can personalise your beautifully-designed FlushSash windows with a choice of heritage details. Choose decorative 'monkey tail' handles and ornamental peg stays to give the feel of a genuine traditional timber window.

These optional finishing features will give your home's interior as much historic style and authenticity as its exterior.

Speak to a member of our friendly team to discuss the many options available for your home. We can help add character and class to your property, while improving its energy efficiency.
There's no need to choose between style and function.

Hardware

Contemporary

For modern interiors, opt for a minimalist and simplistic handle design to suit your decor. Available in a range of colours including black, gold, silver, chrome or white.

A range of window handles are suitable for FlushSash windows. Ask a member of our team for the full range.

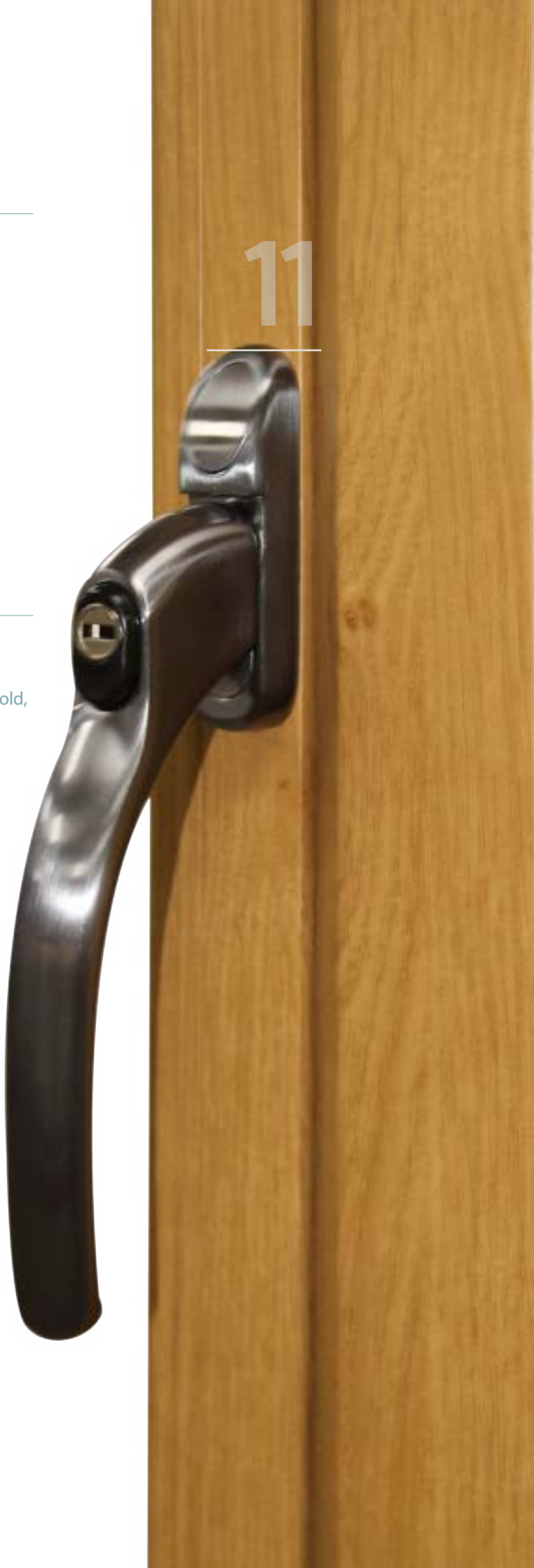

> THANKS TO THE SYSTEM'S CLEVER DESIGN, IT SEAMLESSLY COMBINES TIMELESS ELEGANCE WITH A RANGE OF ROBUST SECURITY FEATURES.

Safe, secure & *energy efficient*

With FlushSash windows you will no longer need to worry about the draughts and damp that are traditionally associated with period properties. Perfect for heritage applications, your home could be a warm and quiet haven if you choose to replace your old weather-worn windows with the elegant, energy-efficient FlushSash.

The five-chamber uPVC frames with double or triple glazing, will ensure your home is extremely weatherproof and draughtproof, providing an outstanding thermal barrier against driving winds and rain, even in the most exposed locations..

Your windows shouldn't just look the part, they should provide the highest standards of security to keep your family, home and belongings safe. By choosing FlushSash windows, you don't have to choose between style and security.

Thanks to the system's clever design, it seamlessly combines timeless elegance with a range of robust security features.

Every window offers multipoint locking and features industry-leading hardware in the form of stylish key-locking handles.

The FlushSash system meets or exceeds all British Standards and holds relevant accreditations for all aspects of security and weatherproofing.

FlushSash has been independently tested to the most rigorous standards and meets BS 6375 for weather performance and strength and also carries the prestigious BSI Kitemark, and for even greater peace of mind, the windows meet the highest security standards of PAS 24

WEATHER RESISTANT

FlushSash delivers outstanding weather resistance and performance.

(U-VALUES) 1.0 W/(m²K)

Indicative U value achieved using a 36mm triple glazed unit - delivering high energy efficiency and big savings on energy bills.

WER A+6 RATED

FlushSash delivers energy efficient A-rated frames with an indicative WER rating of A+6 using a 28mm double glazed unit.

PAS 24 APPROVED

FlushSash windows meet the highest security standards of PAS 24.

FlushSash

traditional styling modern performance

Images are for illustration purpose only. We reserve the right to change product specification at any time.
Due to the limitations of the printing process we recommend that an accurate colour swatch is requested prior to ordering.
The company cannot accept any responsibility for colours or images shown in this brochure.
All information within this brochure is correct at time of going to print.

V04/22 | Company No. 01626563 | VAT No. GB 497951576