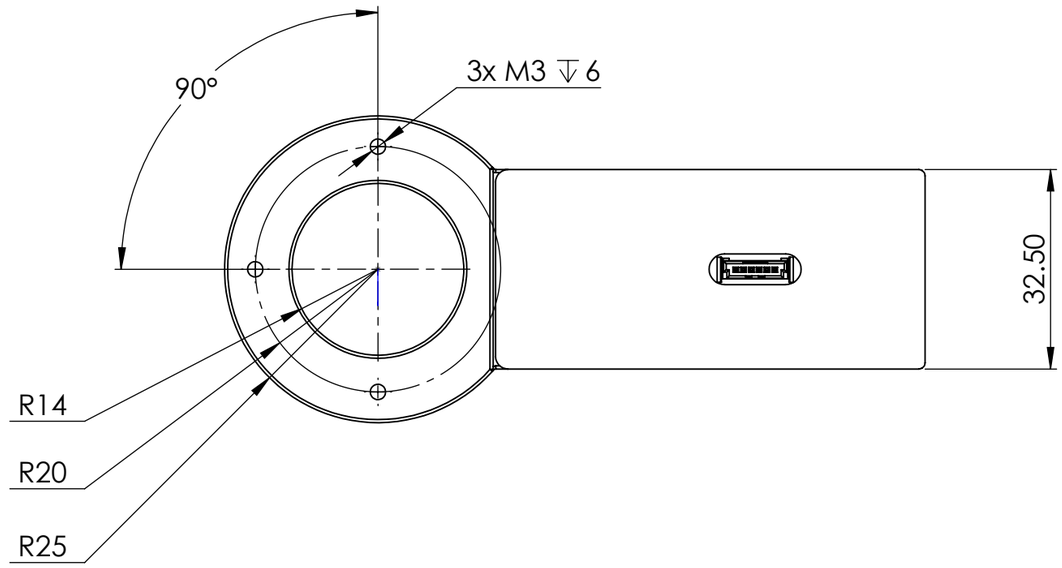

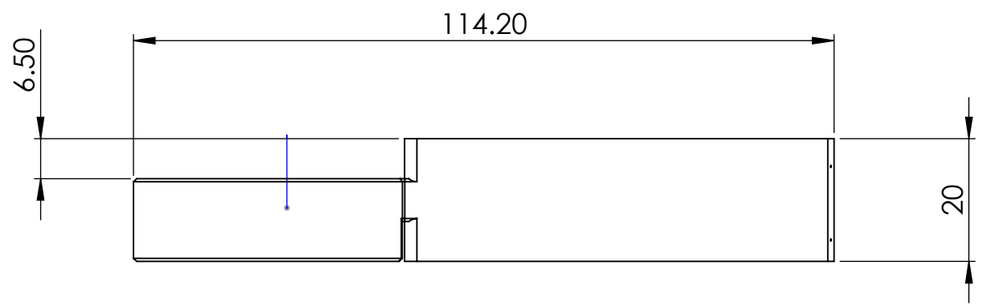

Description				Drawing Number	Version
LR-40				-	-
Date	Drawn by	Date	Controlled by	Material	
03/02/26	MOL	04/02/26	SSU	-	
LESS BE BRILLIANT — MARKETING DOCUMENT – NON CONTRACTUAL				Weight [g]	Scale
				127.05	1:1
				Dimensions in mm	A4 / P 1/1