Specification For Approval

Model : A17251Ø-V2HBTP

Dimensions : Ø172 x 51 mm

Description : AC Axial Fan

Released Date : 2014.12.08

Daring Technology Industry CO.,LTD.

Tel : +886-6-2713872 Fax : +886-6-2055425

E-mail : daring@daring.com.tw

http://www.daring.com.tw

Product Specification

A17251Ø-V2HBTP

Ø172 x 51 mm

172 mm

General Specification

Rated Voltage	AC 230 V
Frequency	50 / 60 Hz
Rated Current	0.11 / 0.11 A
Power Consumption	26 / 26 W
Rotating Speed ±10%	2650 / 3050 RPM
Airflow ±10%	210 / 250 CFM
Static Pressure ±10%	14.0 / 15.5 mmAq
Noise Level	53 / 59 dB
No. of Impeller	5 Impellers
No. of Pole	2 Poles
Rotating Direction	Clockwise View From Label Side
Tolerance	±10% At Rated Voltage
Motor Type	AC Induction Capacitor Motor
Safety	Thermally-Protected
Life L_{10} at 25℃	70000/hrs (Ordinary Humidity)
Insulation	Class B
Weight	920 g
Packing	12 pcs. Per Export Carton. L x W x H = 41x39x21 cm N.W.:11KGS G.W.:12.5KGS

*At Rated Voltage 25℃, 65%RH, Free Air.
*At Rated Voltage AMCA-210-99 Standard.

Main Materials / Parts Specification

Frame / Housing	Aluminum Die Casting, Painted Black
Impeller	Plastic, UL94V-0
Bearing	Ball Bearing
Connection	Terminal

Safety Approvals

Safety	UL	CUL	TUV
File No.	N/A	N/A	N/A

Environmental Specification

Operating Temperature	-20℃~+70℃
Storage Temperature	-40℃~+80℃(Normal Humidity)

Electrical Specification

Insulation Resistance	Minimun 100MΩ between frame and AC lead wire / terminal at 500VDC/min.
Dielectrical Strength	Maximun leakage 0.5mA between frame and AC lead wire / terminal at 1.5KVAC/min.

Airflow Performance

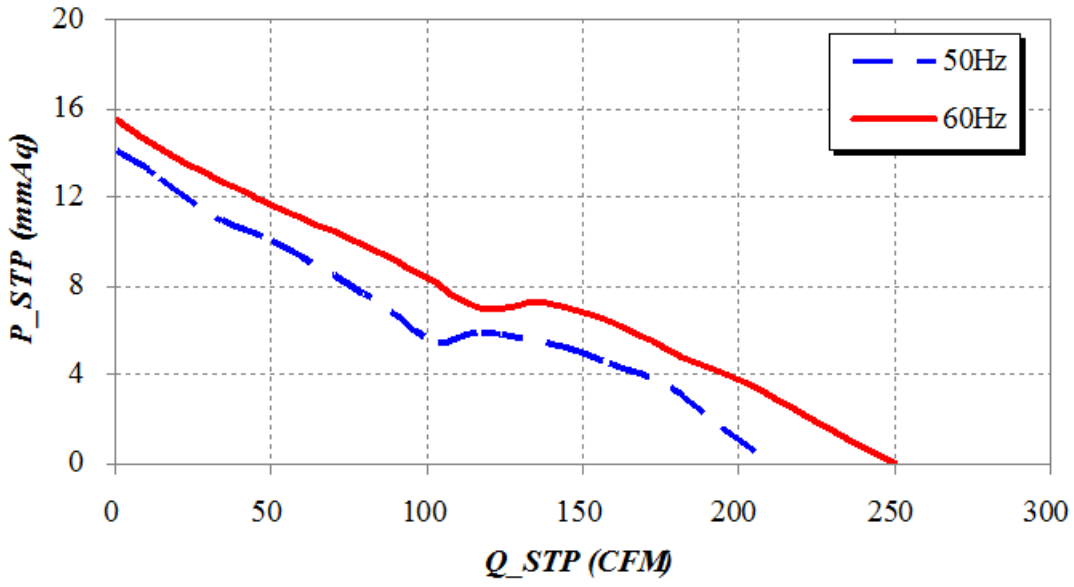

Outline Dimension(Unit:mm)

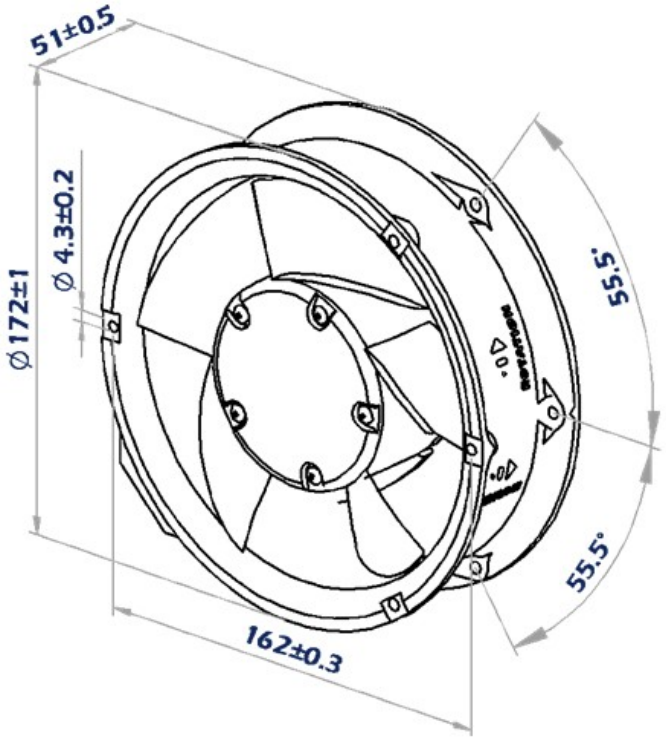

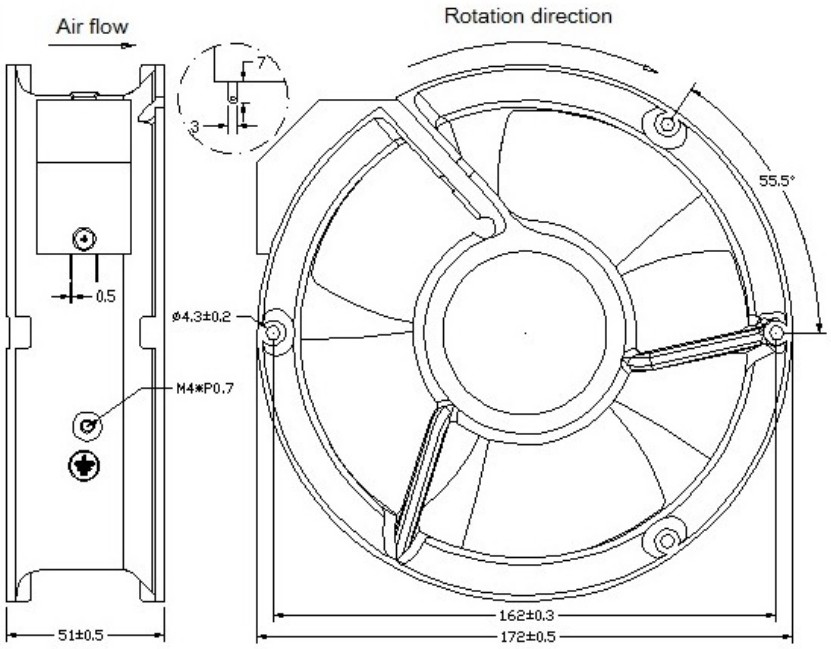

Notes

1 Please do not touch and push Fan Blade with fingers or others, fan blade and bearings may be damaged and it causes noise defect.

2 Do not carry the fan by its lead wires.

3 Please don't install this fan in series with 2x voltage inputs. For example, if a single fan rated at 115VAC, then don't install two times of voltage in series with 230VAC input.

4 Fans are not suitable to be used in the environment that contains aggressive or corrosive fluids.

5 To always ensure that the fans are stored according to the storage temperatures specified. Do not store in an environment with high humidity level. If the fans were stored for longer than 6 months, it is high recommended to apply functional testing before shipping.

6 During installation, caution should be taken when mounting the fan. Incorrect mounting can cause excess resonance, vibration and noise.

7 During testing it is important to consider safety at all times. A suitable guard should be fitted for the fan to prevent personal injury.

8 All test are carried out at relative temperature and humidity conditions of 25℃,65℃.