Specification For Approval

Model : NA19672-VDHBLS(3Ø,IP56)

Dimensions : Ø196 x 72 mm

Description : AC 3-Phase Axial Fan

Released Date : 2025.08.11

<Preliminary>

Daring Technology Industry CO.,LTD.

Tel : +886-6-2037525 Fax : +886-6-2037529

E-mail : daring@daring.com.tw

http://www.daring.com.tw

Product Specification

NA19672-VDHBLS(3Ø,IP56)

Ø196 x 72 mm

196 mm

General Specification

Rated Voltage	AC 230V (Delta connection) AC 400V (Star connection)	
Frequency	50 / 60 Hz	*At Rated Voltage 25℃, 65%RH, Free Air.
Rated Current	0.336 / 0.298 A (230V) 0.193 / 0.172 A (400V)	*At Rated Voltage AMCA-210-99 Standard.
Power Consumption	61 / 76 W(230V) 61 / 76 W(400V)	
Rotating Speed ±10%	2800 / 3200 RPM (230V) 2800 / 3200 RPM (400V)	
Airflow ±10%	580 / 670 CFM (230V) 580 / 670 CFM (400V)	
Static Pressure ±10%	23.5 / 20.5 mmAq(230V) 23.5 / 20.5 mmAq(400V)	
Noise Level	63 / 67 dB(230V) 63 / 67 dB(400V)	
No. of Impeller	3 Impellers	
No. of Pole	2 Poles	
Rotating Direction	Counter-Clockwise View From Label Side	
Tolerance	±10% At Rated Voltage	
Motor Type	AC 3-Phase Induction Motor	
Life L10 at 25℃	70000/hrs (Ordinary Humidity)	
Insulation	Class F	
Weight	1480 g	
Packing	5 pcs. Per Export Carton. L x W x H = 41x28x29 cm N.W.:14 KGS G.W.:16KGS	
Type of Protection	IP56	

Main Materials / Parts Specification

Impeller	Plastic, UL94V-0
Bearing	Ball Bearing
Connection	Lead Wire x 7pcs, UL1007 AWG22 Blue,Black,Brown,Red,White,Yellow,Green&Yellow

Safety Approvals

Safety	
File No.	

Environmental Specification

Operating Temperature	-20℃~+70℃
Storage Temperature	-40℃~+80℃ (Normal Humidity)

Electrical Specification

Insulation Resistance	Minimun 100MΩ between frame and AC lead wire / terminal at 500VDC/min.
Dielectrical Strength	Maximun leakage 0.5mA between frame and AC lead wire / terminal at 1.5KVAC/min

Airflow Performance

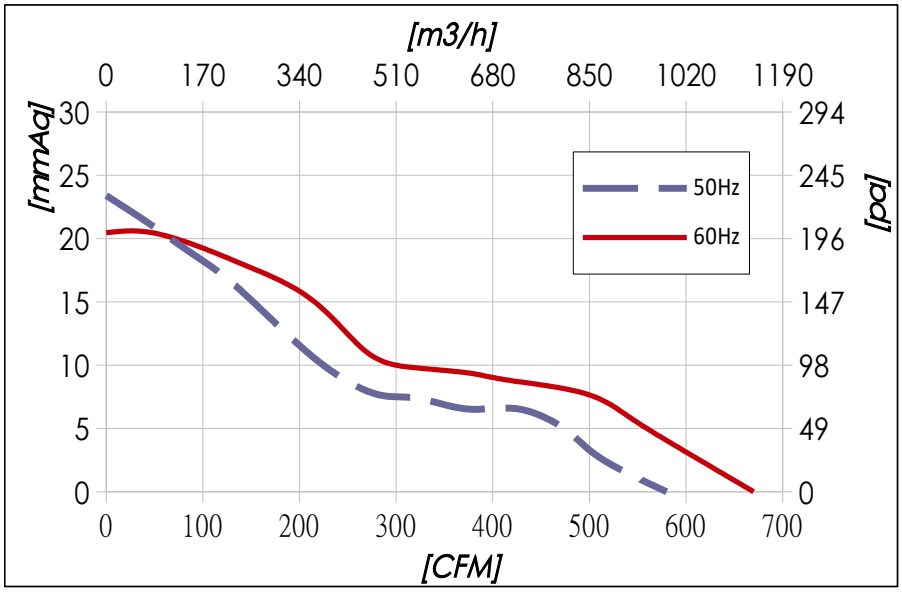

Outline Dimension(Unit:mm)

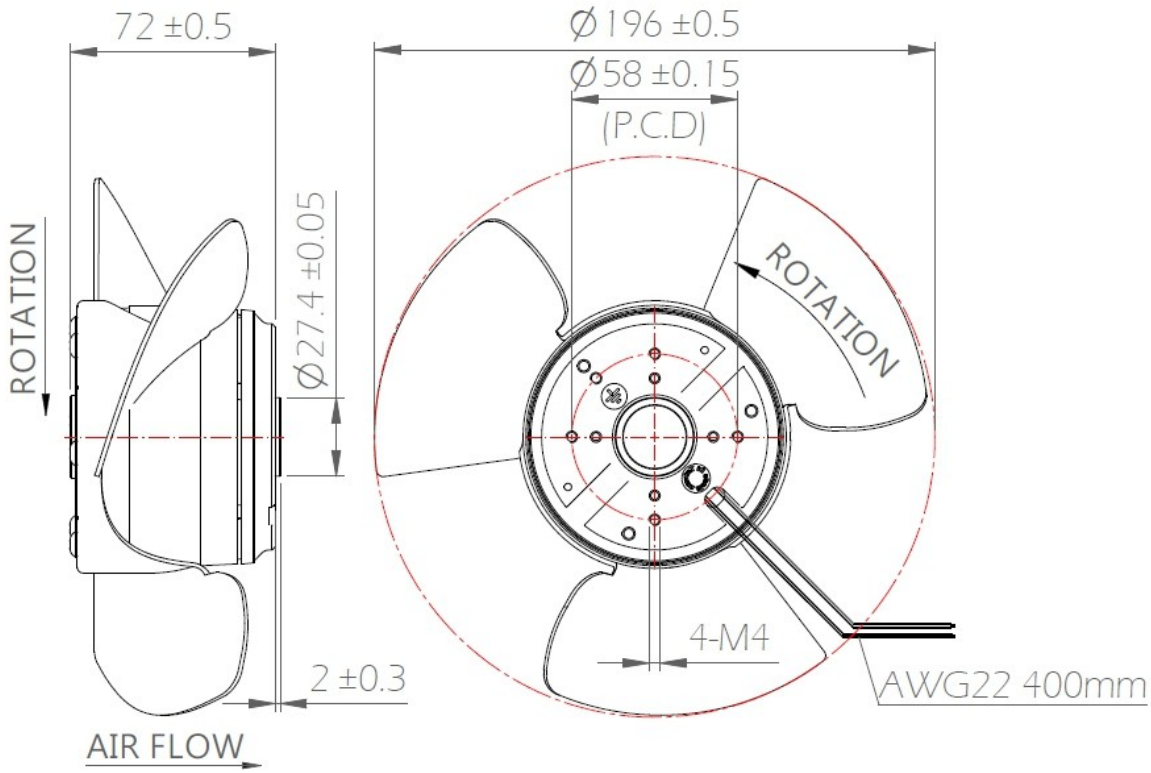

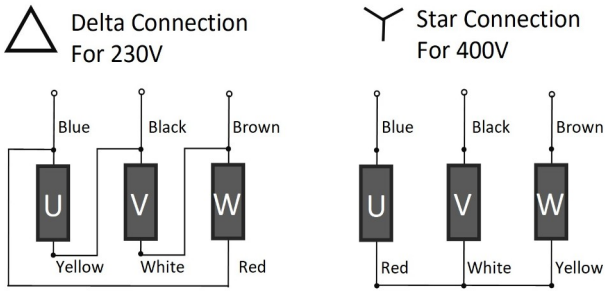

Notes

1 The fan is recommended for a limited warranty period up to one year begin on the delivery date from factory to guarantee a proper operation and service lifetime except further statement. The warranty does not cover defects resulting from misuse against datasheet or damage caused by accidents.

2 Only trained and qualified technical specialists are permitted to install, connect, operate or maintain the fan. Any failure might lead to breakdown, injury, electric shock, burn or fire.

3 Do not perform any repair, disassemble, addition or modifications to the fan, it will invalidate warranty of the fan, and might result in injury, electrical shock burn or fire.

4 Never remove any original identification tag on the fan, it will invalidate warranty of the fan. Make sure the information on tag can be seen clearly after installation to avoid any improperly usage that can result in damage or dangers.

5 Ensure the supply voltage matches the operating voltage of the fan before connecting it. Never use the fan at exceed voltage, temperature, humidity or other level settings given in the datasheet, which might result in breakdown, injury, electrical shock, burn or fire.

6 Only use cables that meet current and insulation grade according to datasheet. Route cables properly after installation so that they can't toch any rotating part.

7 Do not carry the fan by its lead wires, pulling or pinching the lead wires could result in damage to the wires and fan itself.

8 The fan is an auxiliary or built-in component which features no electrically isolating switch, the operator is responsible for providing adequate protection for it. Only connect the device to circuits that can be switched off by an all-pole disconnecting switch. And To operate the fan with an isolating safety protection cover or a fixed finger guard grille.

9 When install the device, wear safety shoes and cut-resistant safety gloves. Well inspect to make sure no any transport and external damage on the fan, if any, the fan must no longer be used or installed. Make sure the fan be mounted properly, incorrect mounting might cause exceed resonance, vibration and noise.

10 The fan will operate immediately once the power or control voltage is applied, it might become damaging if any body, object or external force interfere with the fan operation.

11 Body parts that come into contact with the fan blades can be injured or damaged, secure finger, body or any devices against accidental contact. Always wait until the blades have come to a standstill before working on the fan.

12 Loose items, hair, jewellery or clothing could become entangled and pulled into the device to cause serious injury. Keep hair form the fan and do not wear any loose clothing or jewellery while working on the fan or near the fan.

13 Shut down the fan immediately if you detect any malfunction or ineffective feature include protective features on the fan.

14 To store the fans in clean and stable environment, prevent the fan from dirty, corrosive, hazardous and magnetic environment, avoid direct sunlight and any impact on it. Always ensure the temperature and relative humidity meet the levels specified in datasheet. A pre-testing is recommended before installation if the fan have been stored over 6 months.

15 When disposing of the devices, please comply with all relevant requirement and regulations applicable in your country or local government authorities.

16 All tests in datasheet are carried out at ordinary ambient temperature and relative humidity (25℃, 65%RH) except further statement.