Specification For Approval

Model : A17238-D47BLS(1)

Dimensions : 172 x 151 x 38 mm

Description : DC Axial Fan

Released Date : 2015.09.10

Addition : FG

Daring Technology Industry CO.,LTD.

Tel : +886-6-2037525 Fax : +886-6-2037529

E-mail : daring@daring.com.tw

http://www.daring.com.tw

Product Specification

A17238-D47BLS(1)

172 x 151 x 38 mm

172mm

General Specification

Rated Voltage	DC 48 V
Operating Vooltage	DC 12 ~ 60 V
Start Voltage	DC 12 V
Rated Current ±10%	0.28 A
Power Consumption ±10%	13.44 W
Rotating Speed ±10%	2800 RPM
Airflow ±10%	210 CFM
Static Pressure ±10%	14.5 mmAq
Noise Level	52 dB
No. of Impeller	6 Impellers
No. of Pole	4 Poles
Rotating Direction	Clockwise View From Label Side
Motor Type	DC Brushless Fan Motor
Safety	Lockes Rotor Protection, Polarity Protection
Life L_{10} at 25℃	70000/hrs (Ordinary Humidity)
Insulation	Class B
Weight	880 g
Packing	12 pcs. Per Export Carton. L x W x H = 38x34x21 cm N.W.:11KGS G.W.:12KGS
Type of Protection	IP54

*At Rated Voltage 25℃, 65%RH, Free Air.
*At Rated Voltage AMCA-210-99 Standard.

Main Materials / Parts Specification

Frame / Housing	Aluminum Die Casting, Painted Black
Impeller	Steel, Painted Black
Bearing	Ball Bearing
Connection	Lead Wires UL1007 AWG#22 x3pcs Red(+), Black(-), White(FG)

Safety Approvals

Safety	UL	CUL	TUV
File No.	E348197	E348197	R50267547

Environmental Specification

Operating Temperature	-10℃~+70℃
Storage Temperature	-20℃~+75℃ (Normal Humidity)

Electrical Specification

Insulation Resistance	10MΩ / Between unshielded wire and frame at 500 VDC/min
Dielectrical Strength	5 mA Max. / Measured b/w lead wire (+) and frame at 500VAC/min
Locked Rotor Protection	○ 1 Auto power off after locked at rated voltage for 1 sec. ○ 2 After auto power off, circuit attempt to restart in 2 to 6 sec.
Polarity Protection	○ Open circuit when Vcc&GND are exchanged. ○ Circuit won't be burned within 5 seconds when Vcc&GND are exchanged.

Airflow Performance

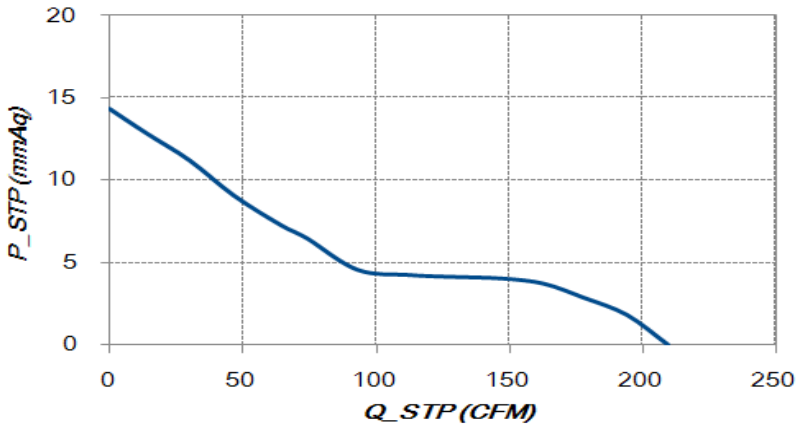

Outline Dimension(Unit:mm)

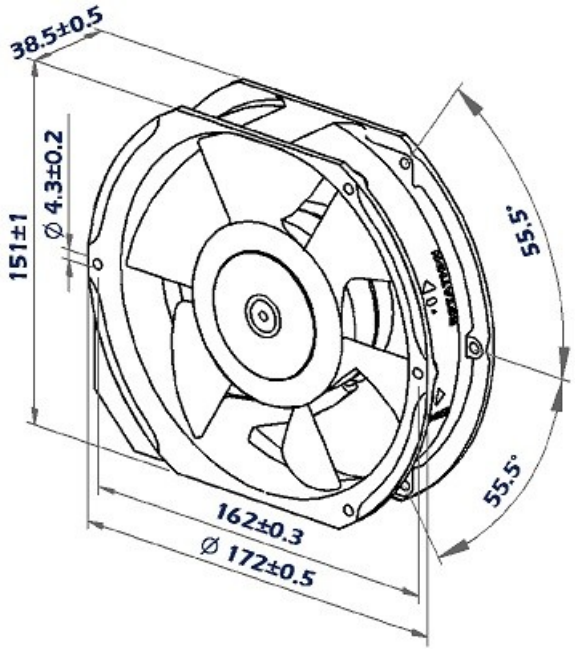

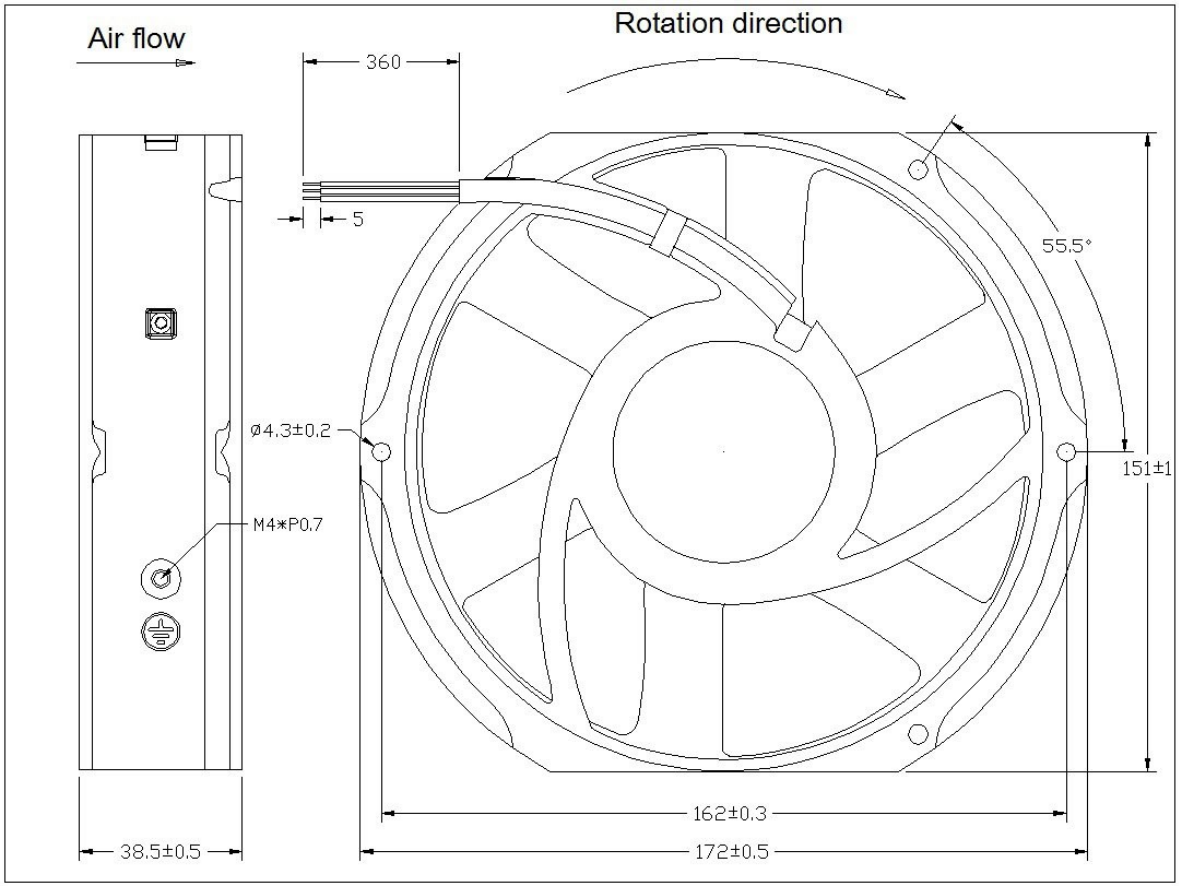

Addition

FG (Frequency Generator) Specification

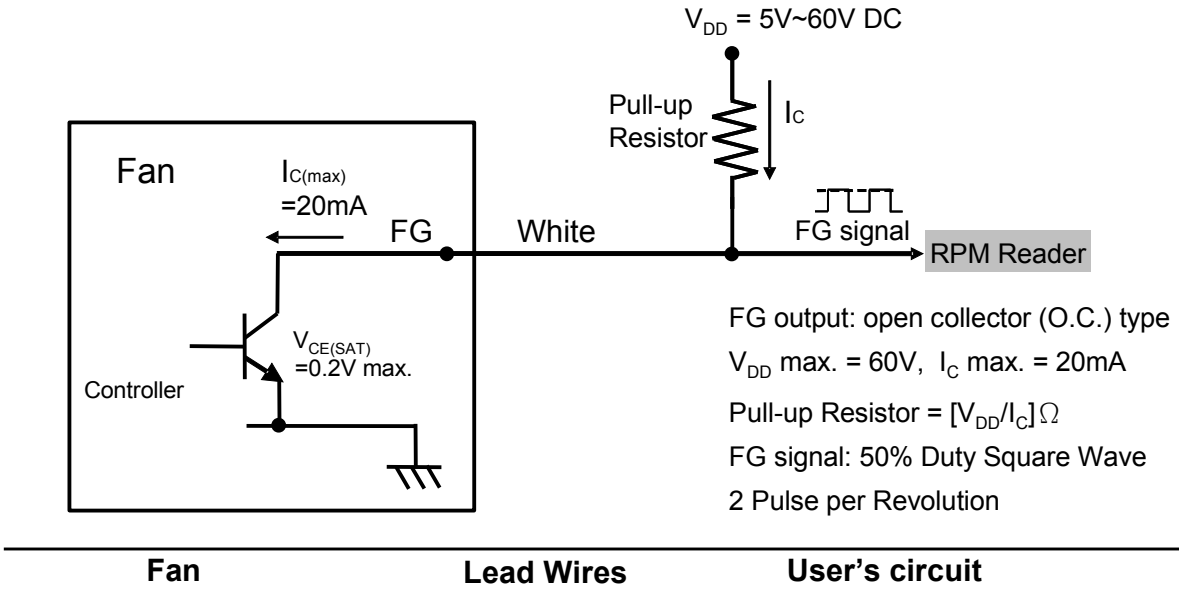

FG Signal Specification

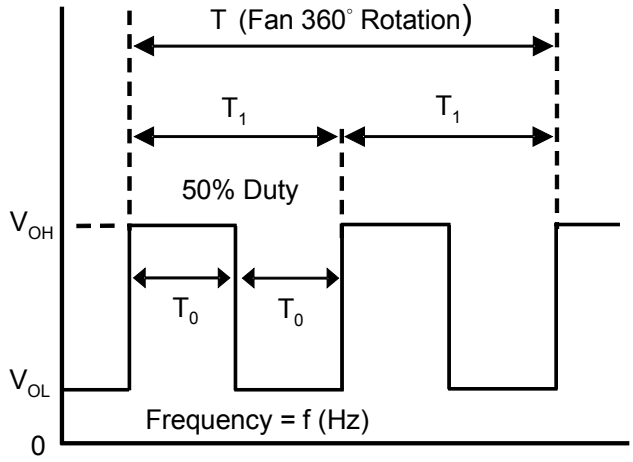

During steady operation:

2 Pulses = 360° Rotation = T(sec)

FG signal: 50% Duty Square Wave

$V_{OL} = V_{CE(SAT)}$ = 0.2V max.

Frequency = f (Hz)

$2T_0 = T_1 = \frac{T}{2}$ (sec)

$$\text{Fan Speed} = \frac{60}{4T_0} = \frac{60}{2T_1} = \frac{60f}{2} \text{ (RPM)}$$

Notes

1 The fan is recommended for a limited warranty period up to one year begin on the delivery date from factory to guarantee a proper operation and service lifetime except further statement. The warranty does not cover defects resulting from misuse against datasheet or damage caused by accidents.

2 Only trained and qualified technical specialists are permitted to install, connect, operate or maintain the fan. Any failure might lead to breakdown, injury, electric shock, burn or fire.

3 Do not perform any repair, disassemble, addition or modifications to the fan, it will invalidate warranty of the fan, and might result in injury, electrical shock burn or fire.

4 Never remove any original identification tag on the fan, it will invalidate warranty of the fan. Make sure the information on tag can be seen clearly after installation to avoid any improperly usage that can result in damage or dangers.

5 Ensure the supply voltage matches the operating voltage of the fan before connecting it. Never use the fan at exceed voltage, temperature, humidity or other level settings given in the datasheet, which might result in breakdown, injury, electrical shock, burn or fire.

6 Only use cables that meet current and insulation grade according to datasheet. Route cables properly after installation so that they can't toch any rotating part.

7 Do not carry the fan by its lead wires, pulling or pinching the lead wires could result in damage to the wires and fan itself.

8 The fan is an auxiliary or built-in component which features no electrically isolating switch, the operator is responsible for providing adequate protection for it. Only connect the device to circuits that can be switched off by an all-pole disconnecting switch. And To operate the fan with an isolating safety protection cover or a fixed finger guard grille.

9 When install the device, wear safety shoes and cut-resistant safety gloves. Well inspect to make sure no any transport and external damage on the fan, if any, the fan must no longer be used or installed. Make sure the fan be mounted properly, incorrect mounting might cause exceed resonance, vibration and noise.

10 The fan will operate immediately once the power or control voltage is applied, it might become damaging if any body, object or external force interfere with the fan operation.

11 Body parts that come into contact with the fan blades can be injured or damaged, secure finger, body or any devices against accidental contact. Always wait until the blades have come to a standstill before working on the fan.

12 Loose items, hair, jewellery or clothing could become entangled and pulled into the device to cause serious injury. Keep hair form the fan and do not wear any loose clothing or jewellery while working on the fan or near the fan.

13 Shut down the fan immediately if you detect any malfunction or ineffective feature include protective features on the fan.

14 To store the fans in clean and stable environment, prevent the fan from dirty, corrosive, hazardous and magnetic environment, avoid direct sunlight and any impact on it. Always ensure the temperature and relative humidity meet the levels specified in datasheet. A pre-testing is recommended before installation if the fan have been stored over 6 months.

15 When disposing of the devices, please comply with all relevant requirement and regulations applicable in your country or local government authorities.

16 All tests in datasheet are carried out at ordinary ambient temperature and relative humidity (25℃, 65%RH) except further statement.