THIS IS ISSUED IN STRICT CONFIDENCE ON THE CONDITION THAT IT IS NOT USED AS A BASIS FOR MANUFACTURE OR SALE, AND THAT IT IS NOT COPIED, REPRINTED OR DISCLOSED TO ANY THIRD PARTY WITHOUT THE WRITTEN CONSENT OF MIN-E-CON

UNLESS OTHERWISE SPECIFIED ALL DIMENSIONS ARE IN INCHES DRAWING STANDARDS PER ANSI Y14.5M-1982

THIRD ANGLE PROJECTION

DWG NO: 00-007-0001

REVISIONS

ECO	REV	DESCRIPTION	DATE	APPROVED
	C	REDRAWN. ADDED SIZE 26 CONNECTOR	5/14/24	WC

PLUG

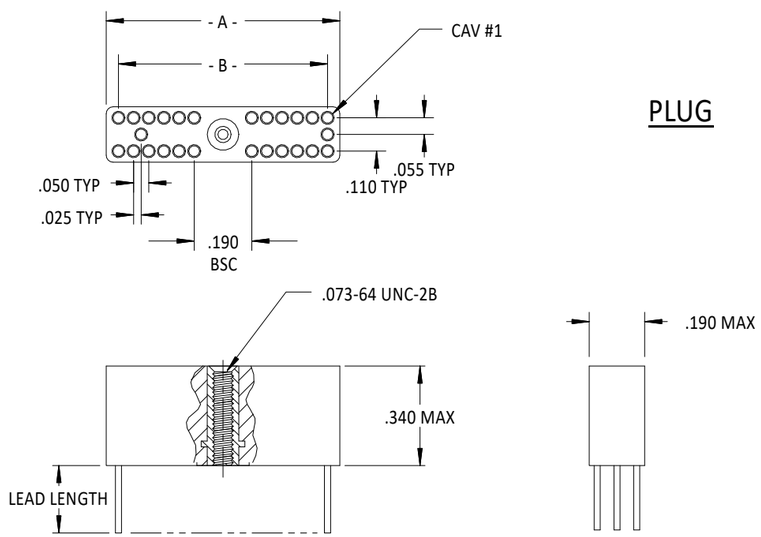

RECEPTACLE

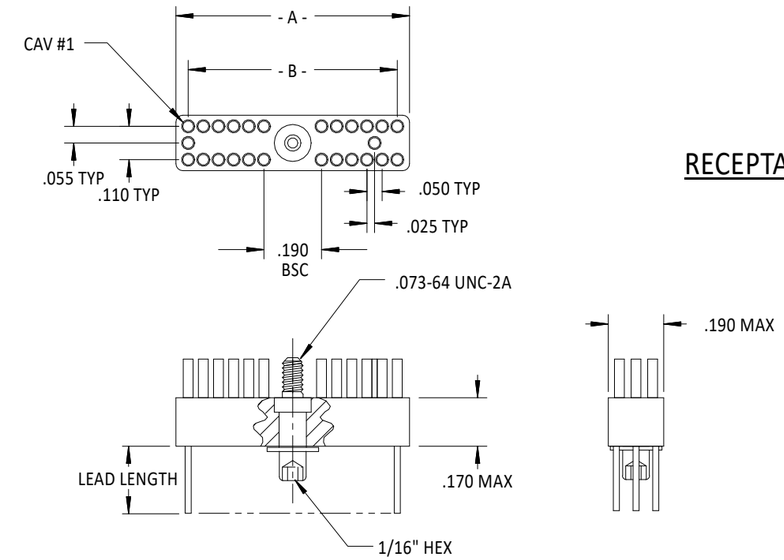

HOW TO ORDER - J E - 26 P 6 E 5 - 18.0 /01

SERIES

INSULATOR MATERIAL
E = POLYESTER (SIZE 26 ONLY)
R = POLYPHENYLENE SULFIDE (SIZE 10 ONLY)

CONTACT LAYOUT
10, 26

CONTACT TYPE
P = PIN (PLUG)
S = SOCKET (RECEPTACLE)

WIRE SIZE (AWG)
4 = 24, 5 = 25 (SOLID WIRE ONLY), 6 = 26, 8 = 28, 0 = 30

WIRE TYPE
C = BARE SOLID COPPER G = 19 STRAND TYPE E M = MIL-DTL-22759/11
E = 7 STRAND TYPE E H = 19 STRAND TYPE ET N = MIL-DTL-22759/33
F = 7 STRAND TYPE ET

INSULATOR COLOR OR BARE COPPER FINISH
1 = ALL WHITE 4 = GOLD PLATED
2 = ALL YELLOW 5 = COLOR CODED PER MIL-STD-681, SYSTEM 1
3 = TINNED

LEAD LENGTH IN INCHES
SOLID WIRE = 0.5 TO 2.0 (0.5 INCH INCREMENTS)
STANDED WIRE = 6.0 TO 120.0 (6.0 INCH INCREMENTS)

FACTORY MOD CODE (OMIT FOR NO MODIFICATIONS)
/01 = HIGH TEMP (200C) USED WITH INSULATOR MATERIAL 'R' ONLY
(CONSULT FACTORY FOR ADDITIONAL MOD CODES)

10 CONTACTS

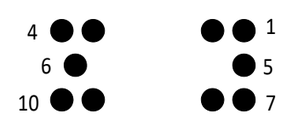

26 CONTACTS

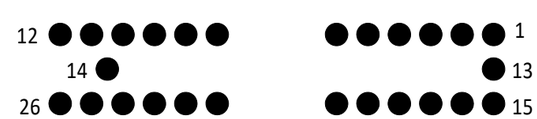

CONTACT IDENTIFICATION
FACE VIEW OF PLUG INSULATOR

CONN SIZE	A MAX	B BSC
J-10P	.375	.290
J-10S	.375	.290
J-26P	.775	.690
J-26S	.775	.690

STANDARD MATERIALS AND FINISHES
CONTACTS----------COPPER ALLOY, GOLD PLATED
INSULATORS----------GLASS FILLED POLYESTER OR PPS
JACKING HARDWARE---STAINLESS STEEL, PASSIVATED

INTENDED USE

SIGNATURES	DATE
DRAWN CHARETTE	5/14/24
CHECKED WC	5/14/24
APPROVED WC	5/14/24

MIN-E-CON

MASTER DRAWING

DWG TITLE
J SERIES CENTER JACKSCREW
SIZE 10 AND 26 (UNSHROUDED)

SIZE	FSCM NO.	DWG NO.	REV
B	54455	00-007-0001	C

SCALE none SHEET 1 of 1

DWG NO: 00-007-0001

MEC33.3 REV B