SPECSHEET

BO125L

BOLLARDS AND HEIGHT RESTRICTORS

Revision: 2 April 2025 12:11 PM
Boplan reference: BO125L...

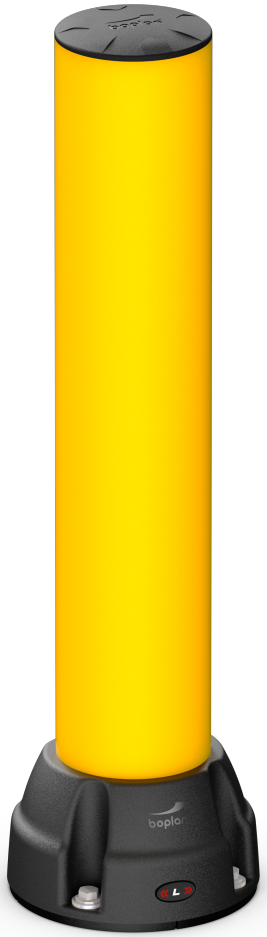

Base Defender with Impact Button

PRODUCT SPECIFICATIONS

APPLICATION		
Environment	The BO125L is the lightest in the series of impact-resistant Boplan bollards. The BO125L is often selected to protect gates, access ways, corners, building facades, loading platforms and machines from collisions involving minor impact risk. The hidden fixations prevent damage to passing goods and vehicles. Due to the large base, pallets are kept at a certain distance from the bollard to protect hands and prevent injury. Suitable for both indoor and outdoor environments.	
Impact performance	2500 Joule (Eq. to 3,8 ton - 4.1 km/h)	
MATERIAL		
Tube	Extrilene® - UV resistant - Fire class E* - Non conductive - Impervious to most chemicals**	
Cap	Sustainable elastomer	
Base Defender	Sustainable elastomer	
COLOURS		
Bollard	Standard: Yellow RAL 1003 Alternative: Black RAL 9005 (Multicolour)	
Base Defender	Standard: Black RAL 9005	
OPTIONAL		
Stripe	Coloured reflective stripe providing a high level of visibility	
BASEPLATES		
	Zinc Coated Steel	Stainless steel
Material	Steel 37	Stainless steel 304
Coating	Electroplated + Lacquered	No lacquer / No coating
Colour	Mat black	Natural colour

*Classification according to EN 13501-1:2007 +A1:2009 - Fire classification of construction products and building elements.
**Ask your local sales office for resistance to specific chemicals.

FIXATIONS				
			ZC (Zinc coated)	SS (Stainless steel)
STANDARD	Concrete screw		Ø12mm x 100mm	Not available
ALTERNATIVE	Wedge anchor		Ø12mm (M12) x 135mm	M12 x 120mm
	Asphalt anchor		Bolt M10 x 40mm + Screw Ø16mm	Not available

The anchors specified in this document are metric. Imperial anchors are available on demand.

boplan READY FOR IMPACT

FEATURES AND FUNCTIONALITY - B0125L

SIZE	
Height	450 mm 750 mm 1000 mm 451 mm - 1000 mm
Profile section	Ø125 mm
Baseplate	Ø200 mm (8 mm thick)
Base Defender	Top: Ø125 mm Base: Ø204 mm Height: 110 mm

REQUIREMENTS	
Concrete quality	minimum C25/30
Concrete floor plate thickness (mm)	minimum 150 mm
Concrete slab dimension around posts (mm)	500 (h) x 500 (w) x 300 (d)
Operational temperature	-10°C up to +40°C
Water and humidity	**Zinc coated:** Indoor and outdoor use in most environments. **Stainless steel:** outdoor use or frequent exposure to water and humidity.

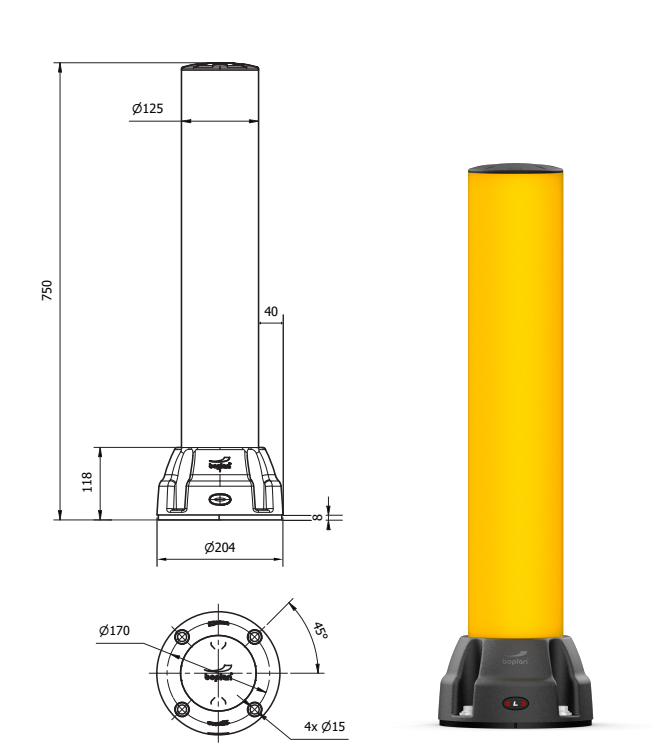

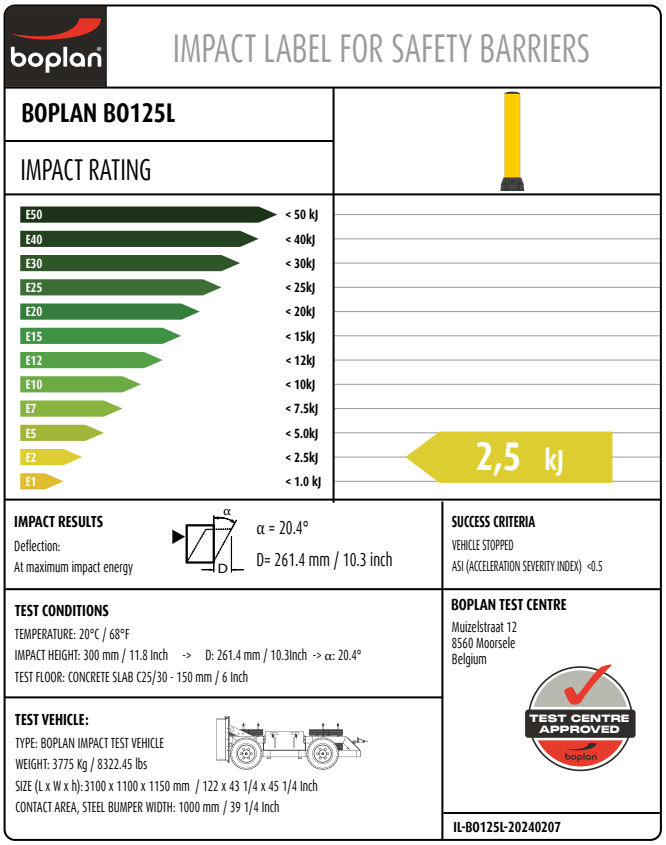

Boplan bv Head Office | Muizelstraat 12, 8560 Moorsele, Belgium | +32 56 20 64 20 | sales@boplan.com | www.boplan.com

DISCLAIMER: ALL PRODUCT SPECIFICATIONS AND DATA ARE SUBJECT TO CHANGE WITHOUT NOTICE TO IMPROVE RELIABILITY, FUNCTION OR DESIGN OR OTHERWISE.
© Boplan, the Boplan logo, Flex Impact, Extrilene, Ice Flex, Teddy Pro and RackBull are trademarks of Boplan bv. All other trademarks are property of their respective owners.

FEATURES AND FUNCTIONALITY - BO125L

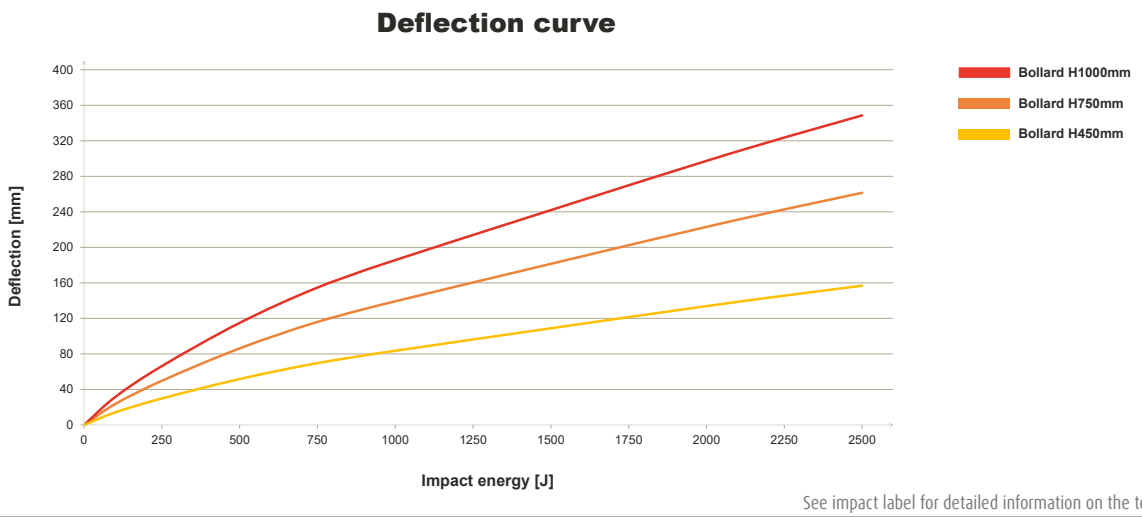

See impact label for detailed information on the test conditions.

REFERENCE LIST - BO125L

	ZINC COATED (ZC)		STAINLESS STEEL (SS)	
	YELLOW	MULTICOLOUR ■	YELLOW	MULTICOLOUR ■
450 mm	BO125L0-0450-0001YEZ	BO125L0-0450-0001MCZ	BO125L0-0450-0001YES	BO125L0-0450-0001MCS
750 mm	BO125L0-0750-0001YEZ	BO125L0-0750-0001MCZ	BO125L0-0750-0001YES	BO125L0-0750-0001MCS
1000 mm	BO125L0-1000-0001YEZ	BO125L0-1000-0001MCZ	BO125L0-1000-0001YES	BO125L0-1000-0001MCS
451 - 1000 mm	BO125L1-1000-0001YEZ	BO125L1-1000-0001MCZ	BO125L1-1000-0001YES	BO125L1-1000-0001MCS

STRIPES (not included)

	Black	White	Yellow
1 STRIPE*	PA0300-0125-0001BL	PA0300-0125-0001WH	PA0300-0125-0001YE

* Remark: Stripes cannot be ordered separately

Boplan bv Head Office | Muizelstraat 12, 8560 Moorsele, Belgium | +32 56 20 64 20 | sales@boplan.com | www.boplan.com

DISCLAIMER: ALL PRODUCT SPECIFICATIONS AND DATA ARE SUBJECT TO CHANGE WITHOUT NOTICE TO IMPROVE RELIABILITY, FUNCTION OR DESIGN OR OTHERWISE.
© Boplan, the Boplan logo, Flex Impact, Extrilene, Ice Flex, Teddy Pro and RackBull are trademarks of Boplan bv. All other trademarks are property of their respective owners.